Ocean Surveyor
Ocean Observer

Installation Guide

RD Instruments

Acoustic Doppler Solutions

P/N 95A-6019-00 (December 2002)

Table of Contents

1 Introduction 1

2 Ocean Surveyor/Observer System Components 1

3 Transducer Mounting Considerations 2
3.1 Location 2
3.2 Orientation 3
3.3 Floating Objects 3
3.3.1 Acoustic Window 3
3.3.2 Sea Chest 3
3.3.3 Fairing 3
3.4 Air Bubbles 4
3.5 Flow Noise 4
3.6 Corrosion and Cathodic Disbondment 4
3.7 Ringing 5
3.8 Acoustic Isolation 6
3.9 Maintenance 6

4 Using Acoustic Windows 8
4.1 Background - Should I use an Acoustic Window? 8
4.1.1 Advantages 8
4.1.2 Disadvantages 8
4.2 What Window should I use? 9
4.2.1 Are there any Other Windows that I can consider? 12
4.3 What are the Acoustic Window Installation Considerations? 13
4.3.1 What should the Window Shape be? 13
4.3.2 Can I Add Strengthening to the Window? 14
4.3.3 How do I Secure the Window to the Well Opening? 14
4.3.4 How to Prevent the Window From Cracking When Going Into Dry Dock? 15
4.3.5 How Much Space should I Have Between the Window and Transducer? 16
4.4 What Other Issues should be Considered When Using an Acoustic Window? 16
4.4.1 What Fluid Should I Fill the Sea Chest With? 16
4.4.2 How Much Fluid Should I Use in the Sea Chest? 17
4.4.3 Should I Use Absorption Material When Using a Window? 17
4.4.4 Do I Need to Worry About Corrosion When Using a Window? 18
4.4.5 Do I Need to Worry About Air Bubbles When Using a Window? 18
4.4.6 Do windows Improve Flow Noise Problems? 18
4.5 What Maintenance is required when using Windows? 19
4.5.1 How Often Should I Inspect the Window? 19
4.5.2 If I find that the Window is Damaged Can I Keep Operating the ADCP? 19
4.5.3 Does the Use of a Window Effect My Warranty? 20
4.6 Insertion Loss 20

5 Conceptual Transducer Well Design 26

6 Electronics Chassis Mounting Considerations 32
6.1 Cabling Considerations 32
6.2 I/O Cable 35
6.3 I/O Cable Identification 36
6.4 Dry Connector Installation 36
6.4.1 Tools and Equipment Requirements (RDI Supplied) 36
6.4.2 Tools and Equipment Requirements (User Supplied) 37
6.4.3 Installation Instructions 37
6.5 Using Trigger-In and Trigger-Out 40

7 Computer Considerations 41

8 Gyrocompass Interface Considerations 43
8.1 Overview of the ADCP Gyro Interface 43
8.1.1 Determining the Synchro Stator Voltage 45
8.1.2 Determining the Size of the Scaling-Resistor Pack 46

8.1.3 Installing the Scaling-Resistor Pack and W-Jumpers 47
8.1.4 Determining and Setting the Synchro Turns Ratio 47
8.2 Stepper Interface 48
8.3 Testing the Gyro Interface 49
8.4 Gyro Cable 51

9 Navigation Interface Considerations 52

10 Power Considerations 52

11 Installation Procedures (Overview) 53

12 Alignment Procedures (Overview) 55

13 Specifications 56
13.1 Water Velocity Specifications 58
13.2 Profile Parameters 59
13.3 Bottom Track Specifications 59
13.4 Echo Intensity Profile 59
13.5 Transducer and Hardware Specifications 60
13.6 Internal Sensors 60
13.7 System Power Specifications 60
13.8 Environmental Specifications 60

14 Outline Installation Drawings 61
Ocean Surveyor/Observer Electronics Chassis - 96A-6000 62
Ocean Surveyor/Observer 75kHz - 96A-6007 63
Ocean Surveyor/Observer 75kHz, Wide Flange - 96A-6011 64
Ocean Surveyor/Observer 150kHz - 96A-6008 65
Ocean Surveyor/Observer 38kHz – 96A-6009 66
Ocean Surveyor/Observer 150kHz, Flanged – 96A-6010 67

List of Figures

Figure 1. Conceptual Drawing of an Acoustic Window with Mounting Ring 14
Figure 2. Location of the Window Bolt Hole Circle Diameter 15
Figure 3. Draining holes locations around beams 1-4 intersection with the window. 16
Figure 4. 38kHz Insertion Loss (one-way) with a 19.1mm window at 0°C 21
Figure 5. 38kHz Insertion Loss (one-way) with a 38.1mm window at 0°C 21
Figure 6. 75kHz Insertion Loss (one-way) with a 9.5mm window at 0°C 22
Figure 7. 75kHz Insertion Loss (one-way) with a 9.5mm window at 0°C 22
Figure 8. 75kHz Insertion Loss (one-way) with a 19.1mm window at 0°C 23
Figure 9. 75kHz Insertion Loss (one-way) with a 19.1mm window at 0°C 23
Figure 10. 150kHz Insertion Loss (one-way) with a 9.5mm window at 0°C 24
Figure 11. 150kHz Insertion Loss (one-way) with a 9.5mm window at 0°C 24
Figure 12. 150kHz Insertion Loss (one-way) with a 19.1mm window at 0°C 25
Figure 13. 150kHz Insertion Loss (one-way) with a 19.1mm window at 0°C 25
Figure 16. Inside Vessel Mounting - OS 38khz Transducer 26
Figure 17. Underneath Vessel Mounting - OS 38khz Transducer 27
Figure 18. Inside Vessel Mounting - OS 75khz Transducer 28
Figure 19. Underneath Vessel Mounting - OS 75khz Transducer 29
Figure 20. Inside Vessel Mounting - OS 150khz Transducer 30
Figure 21. Underneath Vessel Mounting - OS 150khz Transducer 31
Figure 24. I/O Cable 33
Figure 25. Typical Ocean Surveyor/Observer Interface Cable Layout (Overview) 33
Figure 26. Typical Ocean Surveyor/Observer Interface Cable Layout (Detail View) 34
Figure 27. I/O Cable Wiring (73A-6010) 35
Figure 28. OS2 Versus an OS1 I/O Cable Wet-End Connector 36
Figure 29. Gyro Interface Board 45

Figure 30. Cable, Gyro Synchro/Stepper to Electronic Chassis (J2) 51
Figure 31. Transducer Misalignment Reference Points 56

List of Tables

Table 1: Expected Loss for ADCPs with 30Degree Beam Angle 10
Table 2: Expected Loss for ADCPs with 20Degree Beam Angle 11
Table 3: Wavelength of sound in seawater (1500 m/s sound speed) 17
Table 4: Trigger-In Input/Output Signals 41
Table 5: Minimum Computer Hardware Requirements (two COM Ports only) 42
Table 6: Recommended Computer Configuration 42
Table 7: Gyro Interface Options by Model 44
Table 8: Acceptable Gyro Interface Configurations 44
Table 9: Standard Synchro Stator Voltages and Scaling Resistance 46
Table 10: Natel Chip, Resistor Pack, and W-jumper Sockets 47
Table 11: Gyro Interface Switch 1 Settings 48
Table 12: Gyro Interface Switch 2 Settings 48
Table 13: Stepper Voltage Range 49
Table 14: Gyro Interface Troubleshooting Guide 50
Table 15: Water Profiling – Long Range Mode 58
Table 16: Water Profiling – High Precision Mode 58
Table 17: Water Profile Maximum Ping Rate 59
Table 18: Nominal Bottom Track Altitude 59
Table 19: Outline Installation Drawings 61

RD Instruments
Acoustic Doppler Solutions

Ocean Surveyor/Observer Installation Guide

1 Introduction

This book is a guide for installing a RD Instruments (RDI) Ocean Surveyor/Observer Acoustic Doppler Current Profiler aboard a vessel (ship), or platform. Use this section to plan your installation layout. You also can use this book to see what requirements you must consider before purchasing an ADCP. We recommend you distribute this book to your organization's decision-makers and installation engineers.

We are not experts in installing the ADCP aboard a ship. There are too many installation methods. We suggest you seek expert advice in this area because of its importance in ADCP performance. However, we can give you information about how others have installed their systems. In return, we do appreciate receiving information about your installation and the results.

2 Ocean Surveyor/Observer System Components

The standard Ocean Surveyor/Observer is an AC-powered, two-part unit. It consists of a bronze transducer assembly mounted in the ship's hull and an electronics chassis you can place in the ship's lab. Several options are available.

The basic system includes:

- Transducer assembly - Contains the transducer ceramics and electronics. Standard acoustic frequencies are 38, 75, and 150kHz. See the outline drawings for dimensions and weights.
- Electronics chassis - Contains the processing electronics.

- Maintenance kit - Contains spare parts and basic tools needed for routine maintenance.
- Ocean Surveyor/Observer technical manual and user's guide.
- Waterproof dummy plug.
- *VmDas* Software - Controls the ADCP and displays its data through a Windows compatible computer.
- Utilities software - Several programs to help you talk directly to the ADCP (*BBTalk*), view data (*WinADCP*) and other DOS utility programs (*RDI Tools*).

Standard options include:

- Input/Output (I/O) cables and connectors (length determined by customer).
- Gyrocompass (gyro) interface - Connects the ship's gyro to the electronics chassis.

3 Transducer Mounting Considerations

You must consider several potential problems before installing the transducer assembly. Read this section before deciding where to install the transducer assembly. See the outline installation drawings (see "Outline Installation Drawings," page 61) for specifications on our standard Ocean Surveyor/Observer transducer.

3.1 Location

Ideally, you want to install the transducer assembly:

- Where it is accessible both internally (for access to transducer electronics) and externally (to remove biofouling).
- Where the I/O cable length is 100 m (328 feet) or less.
- Away from shipboard protrusions that reflect ADCP energy. Allow for a reflection-free clearance of 15° around each beam (see the outline installation drawings).
- Away from other acoustic/sonar devices, especially those operating at the same frequency (or harmonic) of the ADCP.
- Close to the ship's fore-to-aft centerline. As distance from the centerline increases, vertical accelerations caused by the roll of the ship also increase. These accelerations can cause additional uncertainties in ADCP velocity measurements.

3.2 Orientation

The 38kHz oval transducer should always be mounted with the transducer's beam 3 mark on axis (forward). If you have a round Ocean Surveyor/Observer transducer, then we recommend you mount the transducer head with the Beam 3 mark rotated to a ship-relative angle of 45°. Figure 27, page 56 shows the beam orientation. This causes the magnitude of the signal in each beam to be about the same. This improves error rejection, reduces the effect of ringing (see "Acoustic Isolation," page 6), and increases the ADCP's effective velocity range by a factor of 1.4. If you align Beam 3 at an angle other than zero, you must nullify this offset (see "Alignment Procedures (Overview)," page 55). You can do this through our *VmDas* program or using a direct command.

Use the ship's roll and pitch reference to mount the transducer head as level as possible. If the head is not level, depth cell (bin) mapping will be incorrect. Large misalignments can cause large velocity measurement errors. If you cannot mechanically make the transducer head level, you can use *VmDas* to enter offset values for roll and pitch, or use direct commands for roll/pitch offsets (see "Alignment Procedures (Overview)," page 55).

3.3 Floating Objects

Our transducer assembly is sturdy, but we did not design it to withstand collisions with all floating objects. We strongly suggest you use one of the following.

3.3.1 Acoustic Window

While we do not fully understand windows, we do believe that windows can be used to produce overall performance improvements in vessel-mounted ADCPs. Additionally, if the ship operates where there is danger of barnacle damage or a high density of ice or other floating objects, then the use of an acoustic window is the only option. For more information, see "Using Acoustic Windows," page 8.

3.3.2 Sea Chest

A sea chest is a fixture that surrounds and holds the transducer head, protecting it from debris in the water. The bottom of the sea chest must be open to seawater to allow the acoustic beams to pass through freely. For more information, see "Conceptual Transducer Well Design," page 26.

3.3.3 Fairing

A fairing is a structure that produces a smooth outline and reduces drag or water resistance. The fairing also diverts floating objects away from the

transducers. A fairing shaped like a teardrop, slopped such that the leading edge (closer to the bow) is higher than the back edge, and extends below the hull (typically 12 inches) will divert the air bubbles away from the transducer faces.

3.4 Air Bubbles

Design your installation to minimize the volume of air bubbles in the path of the acoustic beams. Air bubbles attenuate (weaken) the signal strength and reduce the ADCP profiling range. Ships with a deep draft or a non-flat bottom have fewer problems with bubbles. Ways to reduce bubble flow vary with ship characteristics, but two options are available. Mount the transducers below or away from the bubble layer.

- The flow layer is usually within the first two feet below the hull. Bubbles can be trapped in this layer. Mounting the transducer head amidship on the fore-to-aft centerline may help. For ships with propulsion systems that make large amounts of bubbles, use a mounting technique that lets you lower the transducer head below the hull while underway.

NOTE. If you use locally made or existing extension hardware instead of the hardware available from RDI, you may need to make an adapter plate to connect your hardware to our transducer head. See "Outline Installation Drawings," page 61 for the bolt hole locations.

- Divert the bubble layer so it flows around the transducers - You can use fairings to alter the bubble flow (see "Fairing," page 3). An acoustic window (see "Acoustic Window," page 3) may help reduce the bubble problem, but can cause ringing (see "Acoustic Isolation," page 6) and attenuation problems.

3.5 Flow Noise

Water flowing over the transducer faces increases the acoustic noise level, which decreases the profiling range of the ADCP. You can reduce the flow across the transducer faces with a sea chest, fairing, or acoustic window.

3.6 Corrosion and Cathodic Disbondment

Never attach anodes directly to the transducer head. Additional anodes or impressed voltage systems can cause the urethane to separate from the transducer (cathodic disbondment) or cause the material of the transducer to break down. Standard anode protection used for the ship should be installed outside of the well of the transducer head. Mounting of ship's standard anode protection outside of the transducer well will typically not cause any problems. Our transducers are made of a material that has shown to

corrode very little over time when the above precautions are met. The corrosion can be further reduced if the well is covered with a window and then filled with fresh water.

3.7 Ringing

The ADCP transmits an acoustic pulse into the water. The main lobe of this pulse bounces off particles in the water and the signals returned from these particles are used to calculate the velocity of the water.

As stated, the main lobe of the transmitted pulse is what we are using to process and calculate a velocity. The transmitted pulse, however, is made up of many side lobes off the main lobe. These side lobes will come in contact with metal of the transducer beam itself and other items in either the water or the well.

The energy from the side lobes will excite the metal of the transducer and anything bolted to the transducer. This causes the transducer and anything attached to it to resonate at the system's transmit frequency. We refer to this as "ringing."

If the ADCP is in its receive mode while the transducer is ringing then it will receive both the return signals from the water and the "ringing." Both of these signals are then processed by the ADCP. The ringing causes bias to the velocity data.

All ADCPs "ring" for some amount of time. Therefore, each ADCP requires a blanking period (time of no data processing) to keep from processing the ringing energy. Each ADCP frequency has a different typical ringing duration. The typical ringing period for each ADCP frequency is as follows; 38kHz is 16 meters, 75kHz is 8 meters, and 150kHz ADCPs is 4 meters. These typical ringing values are recommended as the minimum setting for all ADCPs using default setups.

It should be noted, on some installations the effects of ringing will last longer than the recommended settings above. For example, the effects of ringing will last longer if the transmit signal becomes trapped inside the transducer well. This can occur because the well itself is ringing with the transducer or when windows covering the opening of the well reflect the signal back inside the well.

The window causes the transmit signal to reflect back into the well due to the difference in impedance between the window and the water. When the transmit signal is reflected in the well it becomes trapped and this results in longer ringing periods. To keep from processing this signal, the blanking period must be increased. Lining the inside walls of the well with a sound absorbing material aid in dampening the ringing effect.

3.8 Acoustic Isolation

Try to minimize the acoustic coupling between the transducer head and the ship. Without adequate acoustic isolation, the transducer output will "ring" throughout the ship and feeds back into the ADCP receive circuits. Ringing causes bias errors in water-track velocities and results in the loss of data in the closest depth cells (bins). Reflections inside a sea chest with an acoustic window also can cause ringing.

You can attain acoustic isolation several ways. At a minimum, use gaskets to isolate all contact points between the ship and the transducer head. Design your installation for:

- A minimum number of contact points between the transducer head and the ship.
- Minimal contact area.
- Single points of contact for positioning and support (when possible).

You also should try to separate the transducer head from the ship using intermediate connections. This is because direct connections transfer the most acoustic energy. Texas A & M used the following installation technique and had minimal ringing problems.

- Transducer head mounted to a thin steel plate
- Steel plate positioned with three pins set into mounting holes on the hull; pins isolated with gaskets
- Steel plate held in place with four I-beams welded to a frame
- Frame bolted to another frame and separated by gaskets
- Second frame bolted to the ship and separated by gaskets

Acoustic isolation from other acoustic devices on the ship is also necessary. You can do this using the following techniques.

- Mount the other acoustic devices as far apart as possible.
- Make sure neither the main lobes nor the side lobes of the acoustic devices point at the transducers, including acoustic reflections.
- Do not to operate devices that use the same frequency or a harmonic of the ADCP's frequency.

3.9 Maintenance

The Maintenance guide explains routine maintenance procedures. You rarely need access to the electronics inside the transducer head. However,

one external maintenance item is important enough to mention here as it may affect how you install the transducer head.

Objects deployed within about 100 meters (328 feet) of the surface are subject to the buildup of organic sea life (biofouling). This means Ocean Surveyor/Observers are subject to biofouling. Soft-bodied organisms usually cause no problems, but hard barnacle shells can cut through the urethane transducer face causing transducer failure and leakage into the ADCP.

The best-known way to control biofouling is cleaning the ADCP transducer faces often. However, in many cases this is not possible. The other alternatives include the use of a window or some sort of anti-foulant protection.

Some of our users have had success applying a thin coat (≈4 mm; ≈0.16 in.) of either a 50:50 mix of chili powder and Vaseline or chili powder and silicone grease to the transducer faces. The chili powder should be the hottest that can be found. Water flowing across the transducers will wash this mix away over time. The silicone mixture tends to last longer.

Some organizations may decide to use antifouling grease. However, most antifouling greases are toxic and may cause problems. Recent tests suggest antifouling grease may cause the urethane on the transducer faces to develop cracks. Warmer temperatures accelerate this effect.

The other method is to use antifoulant paint. At present, we recommend the following antifouling paint manufacturer and paint brand: Courtalds Finishes Interlux brand paints, US Telephone: 908-686-1300, Web Page: www.interlux.com. Contact the antifouling paint manufacturer for preparation and application procedures for this and other antifoulant paints.

CAUTION.

1. Read the Material Safety Date Sheet before using any of the listed solvents and paints.
2. Some antifouling coatings may not be legal for use in all areas. Check with your local environmental agency before using the antifouling paint.
3. Do not arbitrarily use antifouling paints. Be aware that antifouling paints can accelerate the dezincification corrosion of brass. Once initiated, dezincificatioin will rapidly destroy the transducer.
4. RDI no longer recommends the use of Nopcocide for the prevention of biofouling. If using antifouling grease, remove it immediately after recovering the ADCP.
5. Antifouling grease is toxic. Read the product safety data sheet before using the grease. Wear gloves and a face shield when applying the grease. If the skin comes in contact with the grease, immediately wash the affected area with warm, soapy water.
6. When possible, do not coat the transducer faces with cuprous oxide or related paints that contain chemicals such as copper, chrome, or arsenic. These paints advance the corrosion of the transducer assembly and will cause the urethane to separate from the transducer cups.
7. All US Coastal States prohibit the use of tributyl-tins on boat hulls. The European Economic Commission has released a draft directive that would prohibit the use of many organo-tins after July 1989. We strongly recommend you obey your local laws.

4 Using Acoustic Windows

RD Instruments (RDI) builds Acoustic Doppler Current Profilers (ADCP) for use on vessels. Installation of an ADCP in a vessel is done in many ways, but typically the ADCP transducer is mounted inside of a sea chest or well. The opening of the sea chest or well can be open to the ocean or it can be covered by an *acoustic window*.

An acoustic window is a covering that can seal the opening of the sea chest but still allow the acoustic signal (both transmit and received signals) to be transferred through the window. The type, thickness, orientation, and other installation issues of the acoustic window are important to understand. If the wrong material is used or the wrong installation used then the performance obtained by the ADCP will be severely limited.

4.1 Background - Should I use an Acoustic Window?

Like any vessel-mount, acoustic system, the performance of the ADCP is sensitive to acoustic noise. For best performance, the transducer is mounted in its own well, recessed in the vessel hull, with an opening slightly larger than the transducer. An Acoustic Window, mounted across the well opening, is required to isolate the transducer face from flow noise, as the vessel moves through the water. Acoustic windows (or simply windows) can produce overall performance improvements in vessel-mounted ADCPs through the following advantages.

4.1.1 Advantages

- Well will not fill with air bubbles caused by the ship moving through the surface water.
- Flow noise is reduced.
- The well can be filled with fresh water to limit corrosion.
- Barnacles cannot grow on the transducer faces. Barnacle growth is the number one cause of failure of the transducer beams.
- The transducer is protected from debris floating in the water.

Although these advantages are important, it should be known that if the wrong window is used or if the window is not installed properly then the following disadvantages are possible.

4.1.2 Disadvantages

- The range of the ADCP can be reduced because the window will absorb some of the transmit and receive energy.

- The transmit signal could be reflected into the well, causing the well to "ring" like a bell. This will cause the data being collected during the ringing to be biased. Some ships have reported a loss in range as great as 50 meters. Applying sound absorbing material on the well walls may dampen the ringing.
- The transmit signal could be reflected off of the window and back into the other beams.

However, even though there are disadvantages possible our experience has shown that when the correct window is used and it is properly installed that the window advantages are far more important. The remainder of this Application Note will focus on how to choose the window for your vessel, how to mount the window, how to maintain the window, and any other associated concerns when using a window.

4.2 What Window should I use?

While we cannot claim to understand every window, we do believe that we can recommend a material that will work. We have developed a simple model for an acoustic window made from polycarbonate material. Over the past 2 decades we have obtained feed back from customers that has allowed us to prove the model is a fair estimation of what to expect for performance. Polycarbonate was chosen because it can provide enough strength for most installations, is readily available in most countries, it has been shown to last a long time (over 7 years in some installations), and it can be used on all ADCP models (NarrowBand *(NB)*, BroadBand *(BB)*, WorkHorse *(WH)*, and Ocean Surveyor *(OS)*).

The type of ADCP model is very important when choosing a window. The bandwidth of the acoustic signal from the ADCP must be maintained. Different window materials have different losses over a band of frequencies. As an example, the Ocean Surveyor/Observer ADCP uses a bandwidth of 6% or 1% about the system's center frequency. A BroadBand or WorkHorse ADCP uses a bandwidth of 25% or 6% about the system's center frequency. The material polycarbonate has a fairly uniform loss about these frequency bandwidths.

It should be noted that we have no knowledge about the variability of polycarbonates. And so, the acoustic model that we run is for a particular polycarbonate manufactured by Zelux. This is a window-grade, polycarbonate and has a high tensile strength (~9000psi) to resist cracking.

Even when choosing this particular window it is important to choose the proper thickness of window material. A window will absorb sound and reduce the range of the ADCP. Therefore, we always recommend using the thinnest window possible. However, depending on your application a thicker material may be necessary. The following table indicates the ex-

pected loss (two-way) of polycarbonate at different frequencies and thickness.

Table 1: Expected Loss for ADCPs with 30Degree Beam Angle

Frequency (kHz)	Thickness mm (in.)	One-way loss @ 0°,20°,40°C (dB)			Two-way loss @ 0°,20°,40°C (dB)			Expected Loss in Range (meters)
38	76.2 (~3.0)	2.7	2.6	2.3	5.4	5.2	4.6	173
38	63.5 (~2.5)	3.0	2.9	2.5	6.0	5.8	5.0	192
38	50.8 (~2.0)	2.9	3.2	2.9	5.8	6.4	5.8	205
38	***38.1 (~1.5)***	***1.4***	***1.2***	***1.0***	***2.8***	***2.4***	***2.0***	***90***
38	25.4 (~1.0)	2.9	3.3	3.3	5.8	6.6	6.6	211
38	**19.1 (~0.75)**	**1.0**	**0.9**	**0.8**	**2.0**	**1.8**	**1.6**	**64**
38	12.7 (~0.5)	5.3	5.8	5.6	10.6	11.6	10.2	371
38	9.5 (~0.375)	1.8	1.8	1.8	3.6	3.6	3.6	115
38	6.4 (~0.25)	0.7	0.7	0.6	1.4	1.4	1.2	45
75	76.2 (~3.0)	4.2	4.3	3.8	8.4	8.6	7.6	138
75	63.5 (~2.5)	3.9	4.0	3.5	7.8	8.0	7.0	128
75	50.8 (~2.0)	3.6	3.6	3.0	7.2	7.2	6.0	115
75	38.1 (~1.5)	2.7	2.6	2.3	5.4	5.2	4.6	83
75	25.4 (~1.0)	3.1	3.3	2.9	6.2	6.6	5.8	106
75	***19.1 (~0.75)***	***1.4***	***1.2***	***1.0***	***2.8***	***2.4***	***2.0***	***45***
75	12.7 (~0.5)	3.1	3.5	3.3	6.2	7.0	6.6	112
75	**9.5 (~0.375)**	**1.0**	**0.8**	**0.7**	**2.0**	**1.6**	**1.4**	**32**
75	6.4 (~0.25)	5.9	6.3	5.5	11.8	12.6	11.0	202
150	50.8 (~2.0)	5.0	5.2	4.6	10.0	10.4	9.2	83
150	38.1 (~1.5)	4.2	4.4	3.8	8.4	8.8	7.6	70
150	25.4 (~1.0)	3.6	3.6	3.0	7.2	7.2	6.0	58
150	***19.1 (~0.75)***	***2.7***	***2.6***	***2.3***	***5.4***	***5.2***	***4.6***	***43***
150	12.7 (~0.5)	3.1	3.3	2.9	6.2	6.6	5.8	53
150	**9.5 (~0.375)**	**1.4**	**1.2**	**1.0**	**2.8**	**2.4**	**2.0**	**22**
150	6.4 (~0.25)	3.2	3.6	3.3	6.4	7.2	6.6	58
300	25.4 (~1.0)	5.0	5.2	4.5	10.0	10.4	9.0	42
300	19.1 (~0.75)	4.2	4.3	3.8	8.4	8.6	7.6	34
300	12.7 (~0.5)	3.6	3.6	3.0	7.2	7.2	6.0	29
300	***9.5 (~0.375)***	***2.7***	***2.6***	***2.3***	***5.4***	***5.2***	***4.6***	***22***
300	6.4 (~0.25)	2.9	3.4	3.2	5.8	6.8	6.4	27

RDI's recommended thickness is in **blue bold**. RDI's recommended maximum thickness is in ***red italic and bold*** in the above table. All other items will result in poor overall performance or a loss in range that most customers find unreasonable.

One-way insertion loss curves for all items above in **bold** (RDI's recommended thickness) are found in Appendix A of this application note. All other plots are available from RDI upon request.

Note all of the losses and expected ranges are estimated and some of the assumptions we make may not be true in your installation. However, based on several actual installations the values shown have proven to be good estimations. Your actual loss may be higher or lower than what is shown.

Table 2: Expected Loss for ADCPs with 20Degree Beam Angle

Frequency (kHz)	Thickness mm (in.)	One-way loss @ 0°,20°,40°C (dB)			Two-way loss @ 0°,20°,40°C (dB)			Expected Loss in Range (meters)
38	76.2 (~3.0)	N/A	N/A	N/A	N/A	N/A	N/A	N/A
38	63.5 (~2.5)	N/A	N/A	N/A	N/A	N/A	N/A	N/A
38	50.8 (~2.0)	N/A	N/A	N/A	N/A	N/A	N/A	N/A
38	***38.1 (~1.5)***	***N/A***	***N/A***	***N/A***	***N/A***	***N/A***	***N/A***	***N/A***
38	25.4 (~1.0)	N/A	N/A	N/A	N/A	N/A	N/A	N/A
38	**19.1 (~0.75)**	**N/A**	**N/A**	**N/A**	**N/A**	**N/A**	**N/A**	**N/A**
38	12.7 (~0.5)	N/A	N/A	N/A	N/A	N/A	N/A	N/A
38	9.5 (~0.375)	N/A	N/A	N/A	N/A	N/A	N/A	N/A
38	6.4 (~0.25)	N/A	N/A	N/A	N/A	N/A	N/A	N/A
75	76.2 (~3.0)	3.1	3.2	2.8	6.2	6.4	5.6	102
75	63.5 (~2.5)	2.7	2.8	2.6	5.4	5.6	5.2	90
75	50.8 (~2.0)	2.6	2.6	2.3	5.2	5.2	5.6	90
75	38.1 (~1.5)	2.0	2.0	1.8	4.0	4.0	3.6	64
75	25.4 (~1.0)	2.2	2.1	1.8	4.4	4.2	3.6	70
75	***19.1 (~0.75)***	***0.9***	***0.9***	***1.0***	***1.8***	***1.8***	***2.0***	***32***
75	12.7 (~0.5)	2.8	2.9	2.4	5.6	5.8	5.4	93
75	**9.5 (~0.375)**	**1.0**	**0.9**	**0.8**	**2.0**	**1.8**	**1.6**	**32**
75	6.4 (~0.25)	4.2	3.7	2.7	8.4	7.4	5.4	134
150	50.8 (~2.0)	3.6	3.8	3.4	7.2	7.6	6.8	61
150	38.1 (~1.5)	3.1	3.2	2.8	6.2	6.4	5.6	51
150	25.4 (~1.0)	2.6	2.6	2.3	5.2	5.2	4.6	42
150	***19.1 (~0.75)***	***2.0***	***2.0***	***1.8***	***4.0***	***4.0***	***3.6***	***32***
150	12.7 (~0.5)	2.2	2.1	1.8	4.4	4.2	3.6	35
150	**9.5 (~0.375)**	**0.9**	**0.9**	**0.9**	**1.8**	**1.8**	**1.8**	**14**
150	6.4 (~0.25)	2.9	2.9	2.3	5.8	5.8	5.6	46
300	25.4 (~1.0)	3.6	3.8	3.4	7.2	7.6	6.8	30
300	19.1 (~0.75)	3.1	3.2	2.8	6.2	6.4	5.6	26
300	12.7 (~0.5)	2.6	2.6	2.3	5.2	5.2	4.6	21
300	***9.5 (~0.375)***	***2.0***	***2.0***	***1.8***	***4.0***	***4.0***	***3.6***	***16***
300	6.4 (~0.25)	2.2	2.1	1.8	4.4	4.2	3.6	18

RDI's recommended thickness is in **blue bold**. RDI's recommended maximum thickness is in ***red italic and bold*** in the above table. All other items will result in poor overall performance or a loss in range that most customers find unreasonable.

One-way insertion loss curves for all items above in **bold** (RDI's recommended thickness) are found in "Insertion Loss," page 20. All other plots are available from RDI upon request.

Note all of the losses and expected ranges are estimated and some of the assumptions we make may not be true in your installation. However, based on several actual installations the values shown have proven to be good estimations. Your actual loss may be higher or lower than what is shown.

4.2.1 Are there any Other Windows that I can consider?

RDI has only limited experience with other materials. As a result there is not much information we can provide about other materials. However, we can state that different materials will behave differently, depending on both the frequency and bandwidth of the acoustic ADCP signal. The absorption curves of various materials have significant amplitude fluctuations with frequency, which can change in both frequency and amplitude with changes in temperature.

Important acoustic properties of the window include acoustic refractive index (which should be as close as possible to that of water), insertion loss (which should be as small as possible) and speed of sound. There are two acoustic refractive indices: one for shear waves and one for plane waves. The acoustic refractive indices are simply the ratios of speed of sound in water to speed of sounds in the material. Insertion loss combines absorption and reflection of sound, and it depends on both the thickness and the material properties of the window. In particular, you should avoid using window thickness equal to odd multiples of shear mode quarter-waves (Dubbelday and Rittenmeyer, 1987; Dubbleday, 1986). Refer to Selfridge (1985) and Thompson (1990) for more information. Note that the speeds of sound in plastics decrease with increasing temperature and that causes the resonant frequencies to shift. This can be a large effect. Neither Selfridge nor Thompson has much information on the temperature coefficients of sound speeds.

- The life of the material must also be considered as well as its overall strength. We have had customers design their own windows out of Kevlar. They required Kevlar because they required a material that was very strong both for temperature and for strength against heavy seas, objects in the water, and striking the bottom or ice. Kevlar can provide this strength without having to be very thick thus minimizing loss.
- Kevlar windows have been successfully built and used by 2 different institutes (Monterey Bay Aquarium Research Institute (MBARI) in the United States, and the Institut National des Sciences de l'Univers (INSU) in France. The procedure to build the

window is not known by RDI. The properties of the Kevlar windows are not well understood and so a lot of experimentation with different thickness windows was required before these customers were satisfied with the Kevlar window.

- INSU used a graduate student, Roche Frederic in 1997, to perform a study to determine the best thickness and composite of Kevlar to provide a window for a BB VM150kHz ADCP. The report states that the material KEVLAR K49 made with Resine Vinylester ATLAC 580 was used. The following French company produced this material:

  Brest-Composite Industrie
  124 Rue Auatole Frauce
  29200 – Brest, France
  Tel: 02-98-05-19-09
  Fax: 02-98-34-06-02

RDI only knows that this single window was produced for INSU and does not know of any others who are using this material. It is RDI's understanding that the above-mentioned company can produce the Kevlar window but cannot give the acoustic properties required to determine the losses through the window. Contacting this company is done with the knowledge that RD Instruments is not recommending them, but only offering this as a source for the material.

4.3 What are the Acoustic Window Installation Considerations?

In Section 4.2 we provided the recommended window material and thickness. In this section we will provide installation recommendations. Installation of the window must be done properly so that the best performance is possible. The following discussion is broken into sections so that each point can be considered individually.

4.3.1 What should the Window Shape be?

The window should be smooth without cracks or deformities. Typically the window is round and of a diameter that is large enough to clear all four beams. To determine the proper diameter of the window see "Conceptual Transducer Well Design," page 26.

The acoustic window should be flat and parallel to the transducer mounting plate. This will result in a constant angle of 20 or 30 degrees (depending on the transducer beam angle) to the transducer on both the inside and outside window face.

Dome shaped windows have been used successfully. However, if the water temperatures inside the window and outside the window are not the same, all four beams will be refracted and actual velocity components will be rotated into a new coordinate system. In particular, some of the horizontal velocity will appear as a vertical velocity.

4.3.2 Can I Add Strengthening to the Window?

Adding a strengthening member across the window is not recommended because this can cause similar behavior as a cracked window (see "If I find that the Window is Damaged Can I Keep Operating the ADCP?," page 19) or can actually block the acoustic transmit and receive signals.

4.3.3 How do I Secure the Window to the Well Opening?

We recommend that a steel ring around the outside of the window be used because you do not want the screw heads to come in direct contact with the window material as it may crack under the strain.

It is recommended that window be designed so that the ring will sit flush with the entire window face as shown in the Figure 1. Flat headed bolts or recessed bolts should be used. All of these will maintain a smooth surface around the entire window and will prevent any chance for cavitation (see "Do I Need to Worry About Air Bubbles When Using a Window? ," page 18 for more information).

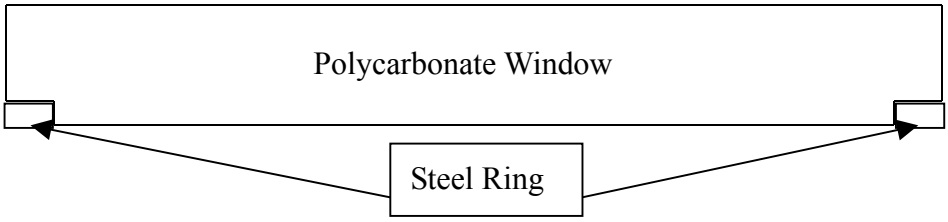

Figure 1. Conceptual Drawing of an Acoustic Window with Mounting Ring

Do not thread the polycarbonate window. Use bolt through holes spaced evenly around the window. The number of bolt through holes (typically 16 to 24 holes) should be enough to prevent leakage and will provide equal pressure on the window to prevent cracking.

The bolt circle should be located a distance from the edge of the window that is a minimum of twice the diameter of the bolt through holes, see Figure 2, page 15.

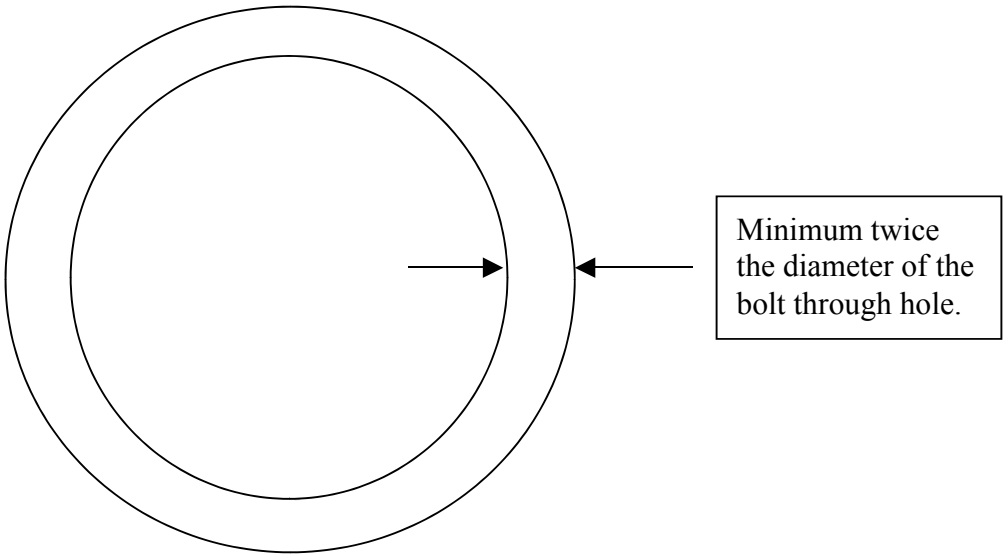

Figure 2. Location of the Window Bolt Hole Circle Diameter

4.3.4 How to Prevent the Window From Cracking When Going Into Dry Dock?

Using as thin a window as possible may mean that the window will not be able to support the water inside the sea chest when the vessel goes into dry dock. This means that you must either be sure to have a way to drain the sea chest prior to going into dry dock or allow a way for the water to drain out of the sea chest during dry dock. The former must be done as part of the sea chest design and the latter can be accomplished by placing holes in the window face.

The holes in the window face will allow water to freely flow in and out of the well. However, drilling holes in the window will increase your chances of flow noise, air bubbles in sea chest, corrosion, bio-fouling, and will make the sea chest non-hydrostatic. The bio-fouling will require that you have regular transducer inspections and cleanings. If you make the sea chest non-hydrostatic then in heavy seas the window can crack as it flexes from wave slamming. Dave Taylor Model Basin has measured slamming pressures as high as 300 psi with durations of a few milliseconds. If the sea chest behind the window is hydrostatic, no pressure gradient will exist across the window and no substantial deflections will occur.

With those considerations in mind you may still want to drill holes in the window. If you drill holes in the window then you must make sure that they are outside of the acoustic beam pattern of the beams, see Figure 3. As long as the holes remain outside of the beams they can be as large as is required to prevent the window from flexing when in heavy seas.

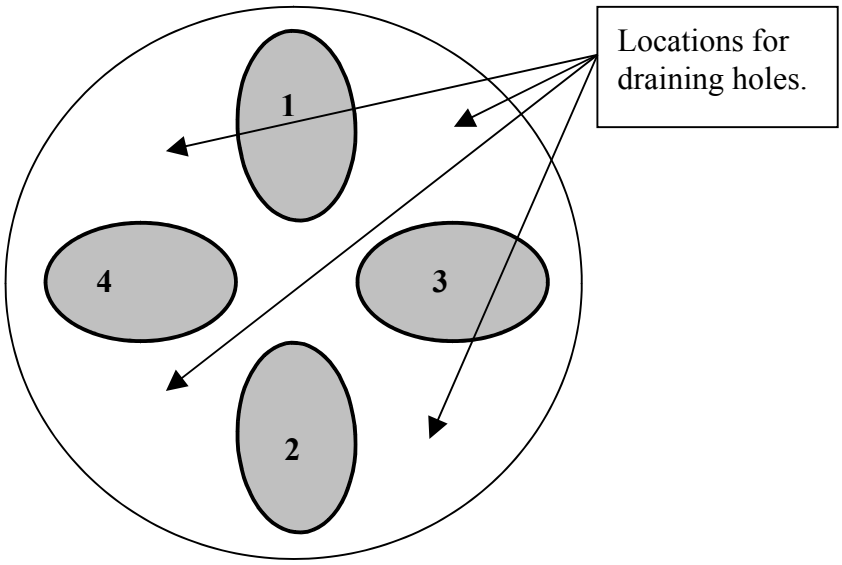

Figure 3. Draining holes locations around beams 1-4 intersection with the window.

4.3.5 How Much Space should I Have Between the Window and Transducer?

Never allow the transducer to touch the window. Separation is good for reducing the strength of the multiple fields of flow noise. However, we must limit the separation to prevent the reflection of a beam off of the window into another beam. This causes cross talk between the beams.

Therefore, with all ADCP models and frequencies the recommended distance between the transducer and the inside face of the window should be between 6.4mm to 12.7mm. This will ensure that there is no cross talk between beams and will provide adequate spacing to reduce flow noise. See "Conceptual Transducer Well Design," page 26 for more sea chest design issues.

4.4 What Other Issues should be Considered When Using an Acoustic Window?

Once you decide to use a window there are many issues that no longer are a worry but there other new things you do need to worry about. This section will outline each of these items and the issues related to them.

4.4.1 What Fluid Should I Fill the Sea Chest With?

If you have not placed holes in the window and you are not going to work in an area where freezing is an issue then the sea chest should be filled with fresh water. Fresh water decreases the issues of corrosion in the sea chest.

If you will be in an area where freezing of fresh water would be an issue then seawater can be used.

Some users have placed ethylene glycol into the fresh water well to prevent freezing. Although this will not harm the transducers you will have to perform post processing on the data sets from the NB, BB, and WH ADCPs (this issue is not present for the OS ADCP). The NB, BB, and WH ADCPs must have the velocity data scaled properly based on the speed of sound in the sea chest. Ethylene glycol causes the water to have an inverted speed of sound change to that of fresh water or salt water. This means that RDI's standard software programs will not be scale the data properly. You will have to record separately the speed of sound in the sea chest and then in post processing correct the ADCP velocity data appropriately. However,

4.4.2 How Much Fluid Should I Use in the Sea Chest?

The transducers must be completely immersed in water. No air should be in front of the transducers and the pressure within the sea chest should be adjusted to keep the window from bowing in and out, and thereafter, the volume should be kept constant.

4.4.3 Should I Use Absorption Material When Using a Window?

The window causes some of the transmit signal to reflect back into the well due to the difference in impedance between the window and the water. When the transmit signal is reflected in the well it becomes trapped and this results in what is called ringing. To keep from processing this signal, the blanking of the ADCP will have to be increased.

However, in extreme cases, ringing can last a period that will cause the first 50-100 meters of data to be unusable. Therefore, a sound absorbing material should be used inside the sea chest to minimize the effects of sound ringing within the sea chest. The material should be a minimum of one wavelength thick (include the sound speed of the absorbing material when calculating the size of a wavelength). Approximate wavelengths of sound in seawater are given below in Table 3. Using standard neoprene wet suit material has been found to work well with 75 and 150hKz frequency ADCPs.

Table 3: Wavelength of sound in seawater (1500 m/s sound speed)

Frequency (kHz)	Wavelength (mm)
38	40
75	20
150	10
300	5

4.4.4 Do I Need to Worry About Corrosion When Using a Window?

Corrosion is always possible. However, our transducers are made of a material that has shown to corrode very little over time when the above precautions are met. There is nothing that you can do to protect the transducer from corrosion. However, if the well is covered with a window and then filled with fresh water corrosion is can be further minimized. You should inspect the transducer regularly for signs of corrosion.

Note, never attach any anodes directly to the transducer head. Additional anodes or impressed voltage systems can cause the urethane to separate from the transducer (cathodic disbondment) or cause the material of the transducer to break down. Standard anode protection used for the ship should be installed outside of the well of the transducer head. Mounting of ship's standard anode protection outside of the transducer well will typically not cause any problems.

4.4.5 Do I Need to Worry About Air Bubbles When Using a Window?

All vessels create air bubbles in the water as the ship moves through the water. Ships with a deep draft or a non-flat bottom have fewer problems with bubbles. If you are using a window these bubbles will still be present. If the window is sealed then this air will not fill the sea chest. However, if the window is not sealed then air can fill the sea chest. You must make sure to vent air from the sea chest periodically if there is a possibility that air will become trapped in your sea chest.

To avoid air bubbles from getting into the front of the window you should mount the transducers below or away from the bubble layer. The flow layer is usually within the first two feet below the hull. Bubbles can be trapped in this layer. Mounting the transducer head amid ship on the fore-to-aft centerline may help. Another technique is to divert the bubble layer so it flows around the transducers. A fairing around the sea chest can help with this, but care must be taken so that you do not cause cavitation.

4.4.6 Do windows Improve Flow Noise Problems?

Water flowing over the transducer faces increases the acoustic noise level, which decreases the profiling range of the ADCP. A window reduces the coupling of flow noise to the transducer. This is because of the gap filled with fluid between the inside of the window face and the transducer faces attenuates the flow noise. By reducing flow noise you are increasing the signal to noise ratio. The higher the signal to noise ratio the better the stronger the returned signal will appear. This will result in better data reception and longer ranges.

4.5 What Maintenance is required when using Windows?

In general, a window provides protection to the transducer from the most common sources of problems such as bio fouling and corrosion. However, the window can still become covered with bio fouling or could become damaged. The following section discusses these issues.

4.5.1 How Often Should I Inspect the Window?

Since growth of mussels, barnacles, and other bio fouling occurs on all vessels the window should be inspected and cleaned by divers on a regular interval. This interval should be often enough to prevent the growth of anything on the window and to allow inspection for damage to the window. It is recommended that this interval be at least once per year, but may be required more often in areas that have heavy bio-fouling growth.

When inspecting the window you should inspect for bio-fouling growth, cracks, damage, for air pockets, and for mud on the inside of the window. We have seen cases where the inside of the well became filled with mud. The mud entered through a crack in the window and where the holes were drilled in the window. Bio fouling should be cleaned off, air should be purged from the sea chest, and mud should be removed from the sea chest.

4.5.2 If I find that the Window is Damaged Can I Keep Operating the ADCP?

In general, any window that is cracked or is damaged so that it is not smooth should be replaced as soon as possible.

A window that is damaged causes a problem with the acoustic transmission. The exact problem or problems seen because of this damage will vary depending on where the break is and the way a beam would strike the damage. All windows have losses because of an impedance difference to the water inside the well and outside the well. There are also losses that are built up in the window. An important loss is due to the shear wave that is created as our acoustic signal passes through the window at an angle. This shear wave traps sound in the thickness of the window as the acoustic signal tries to pass through the window. If the window has a crack in it then the window can cause this trapped energy to bounce in all directions rather than remain trapped in the window. Depending on the size of the crack, the location of the crack, and what the window does around the crack this reflected energy may even go into other beams.

Regrettably, there is no way to predict on what can happen as a crack will have a strange pattern to it. A single beam or all four beams may be affected. However, in either case it is enough to know that a crack in the

window is very bad and will cause the energy that is transmitted and received in a beam to be deflected at strange angles.

Additionally, cracks can cause the window to have a rough surface. This can result in cavitation around the window. Cavitation results in air being trapped near the crack. This air can cause energy to be reflected back into the transducer well instead of traveling through the water.

4.5.3 Does the Use of a Window Effect My Warranty?

The use of a window has no impact on warranty. The window is primarily an aid to optimal performance. A window isolates the transducer face from flow noise when the vessel is moving and provides protection from bio fouling. These all increase the performance and reliability of the transducer. The window will also absorb some of the transmitted and returned signals. This will have an adverse effect on performance. However, when the proper window is used this adverse effect is minimal compared to the benefits of using a window. RDI cannot be responsible for the acoustic design of the vessel, but that design and the installation of our transducer certainly can adversely affect the ADCP system performance.

4.6 Insertion Loss

The following section contains insertion (one-way) loss graphs for each of the ADCP frequencies at each transducer beam angle at 0°C. These graphs are provided as an example of the expected insertion loss.

The main beam of each ADCP system at its maximum bandwidth is displayed as the red line on each graph (the sin X/X is represented by the smaller bumps in red). The minimum and maximum frequencies used on the X-axis of the graph were chosen so that this bandwidth would be approximately centered on the graph.

The blue line represents the expected loss across this bandwidth of frequencies for this thickness of polycarbonate. The Y-axis of each graph represents the expected insertion loss. See the example below for descriptions.

Uniform Ave. IL represents the entire average insertion loss over the entire frequency (X-axis) shown. The Weighted Ave. IL represents the average insertion loss over the bandwidth of the ADCP frequency. The Weighted Ave. IL is used to complete Table 1, page 10 and Table 2, page 11 of this document.

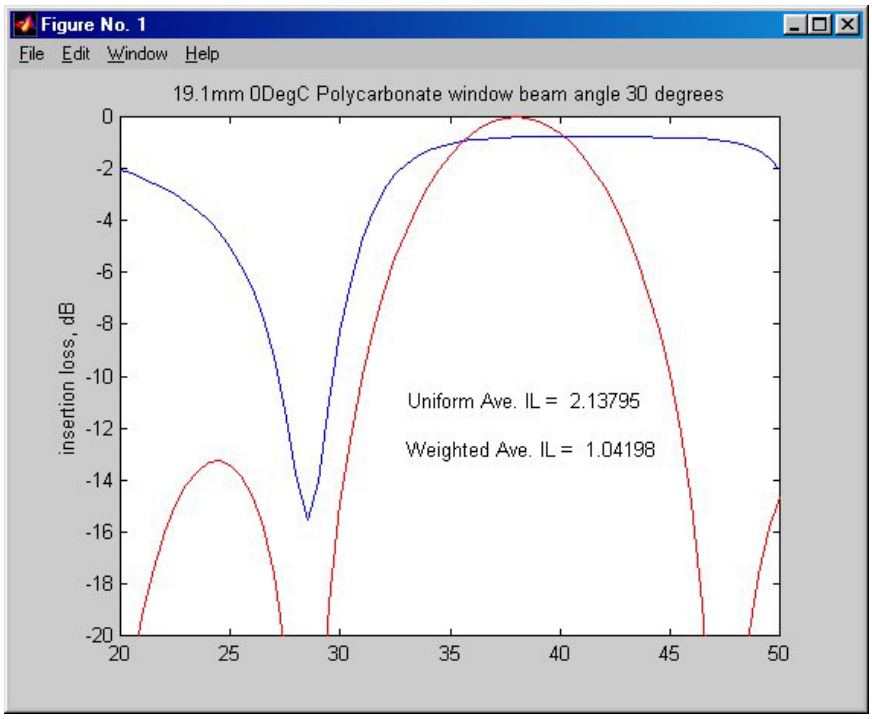

Figure 4. 38kHz Insertion Loss (one-way) with a 19.1mm window at 0°C

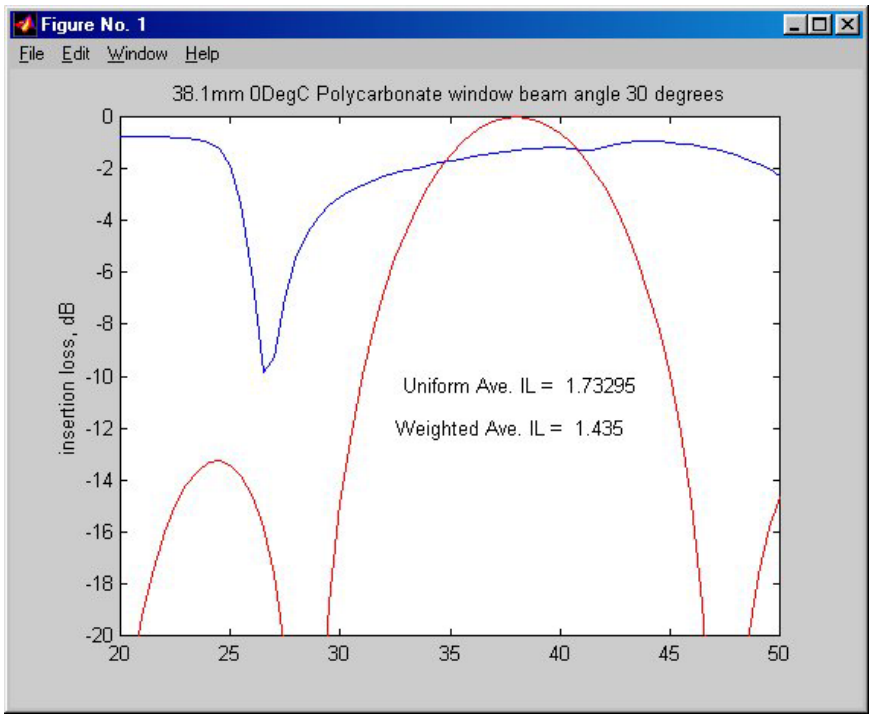

Figure 5. 38kHz Insertion Loss (one-way) with a 38.1mm window at 0°C

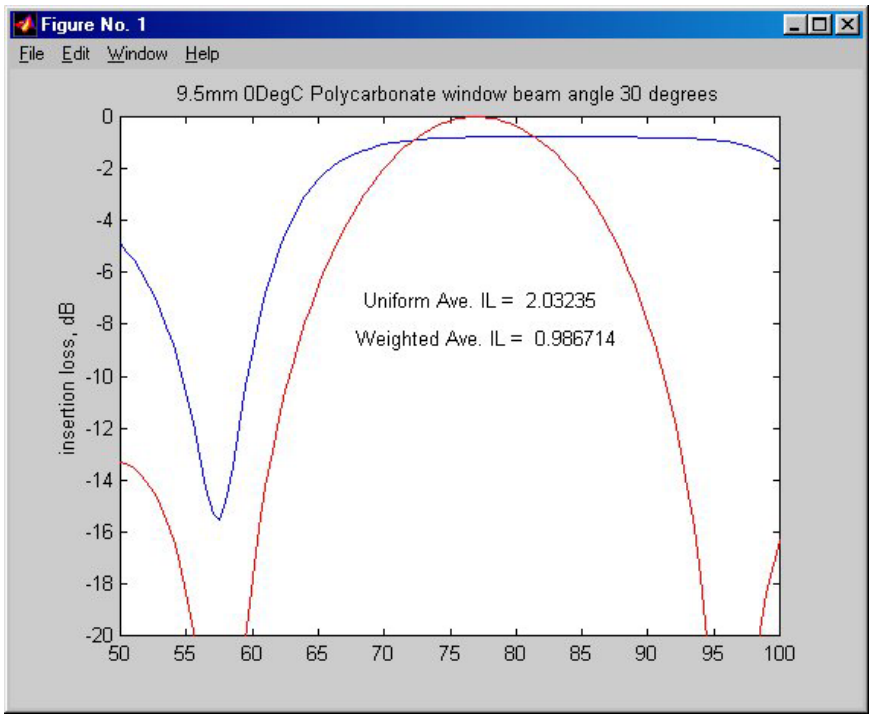

Figure 6. 75kHz Insertion Loss (one-way) with a 9.5mm window at 0°C

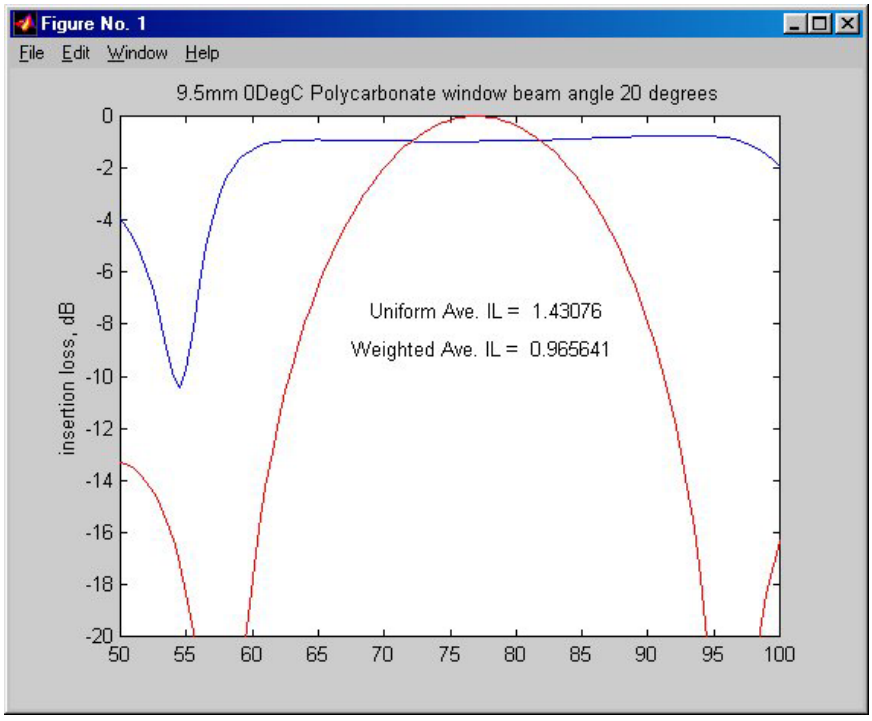

Figure 7. 75kHz Insertion Loss (one-way) with a 9.5mm window at 0°C

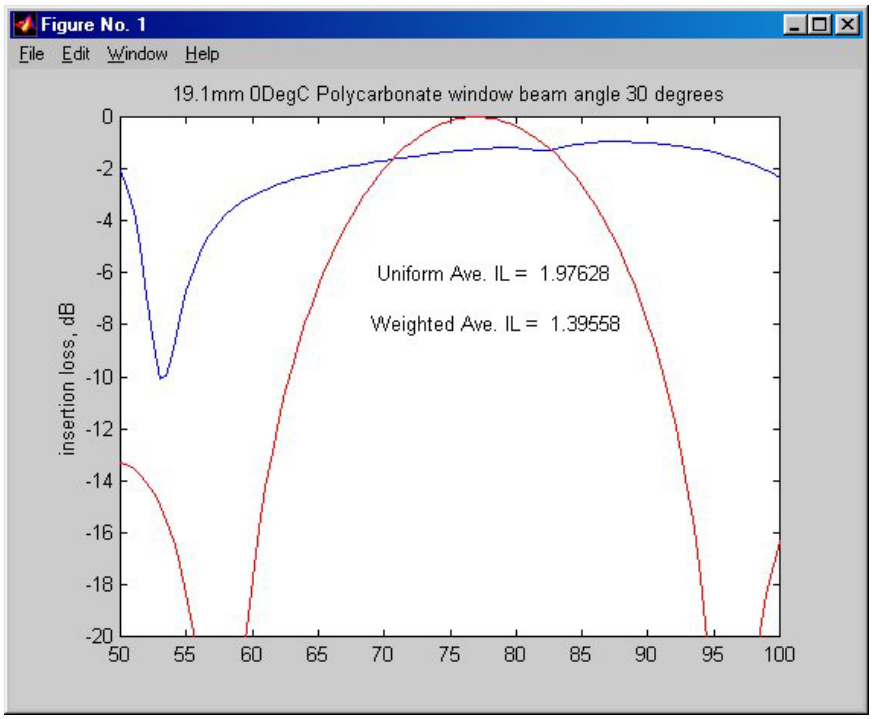

Figure 8. 75kHz Insertion Loss (one-way) with a 19.1mm window at 0°C

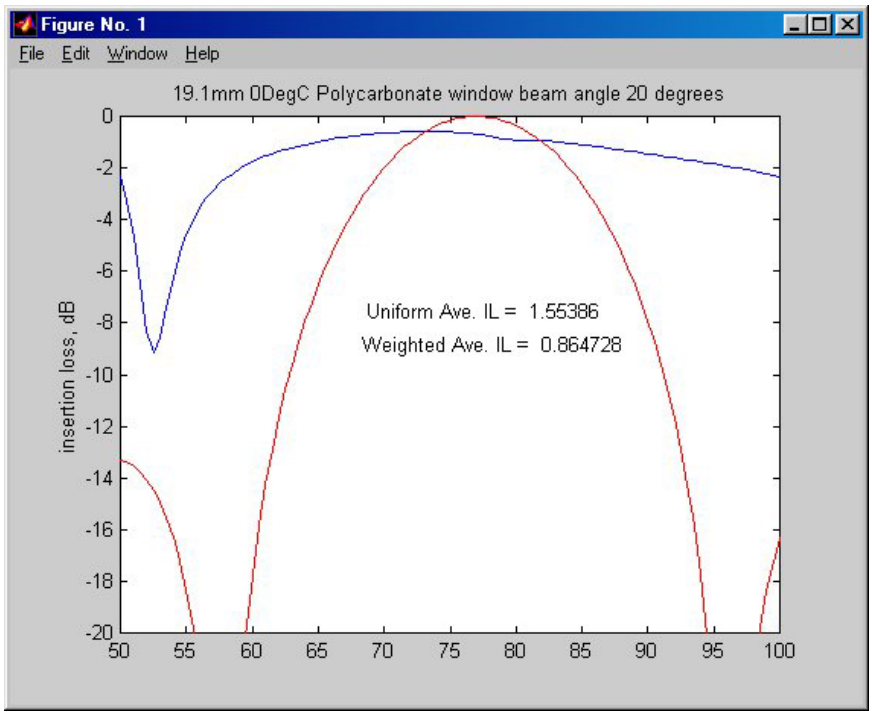

Figure 9. 75kHz Insertion Loss (one-way) with a 19.1mm window at 0°C

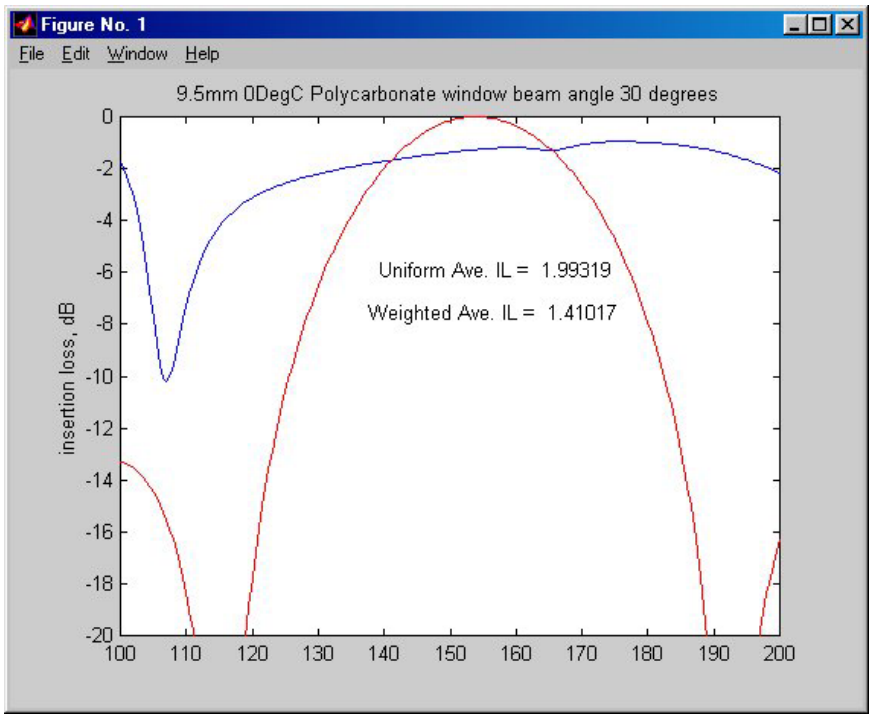

Figure 10. 150kHz Insertion Loss (one-way) with a 9.5mm window at 0°C

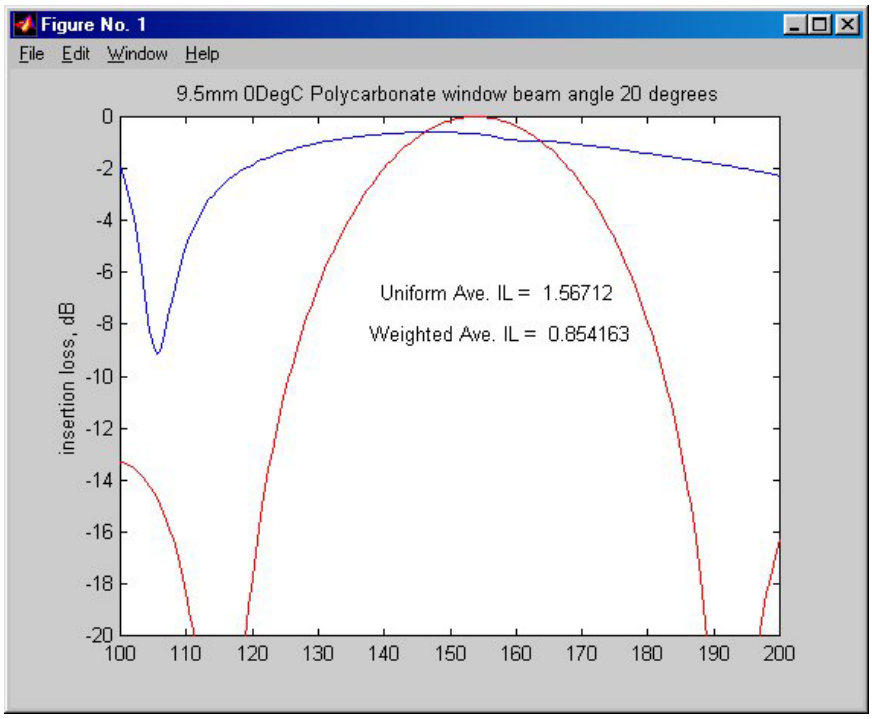

Figure 11. 150kHz Insertion Loss (one-way) with a 9.5mm window at 0°C

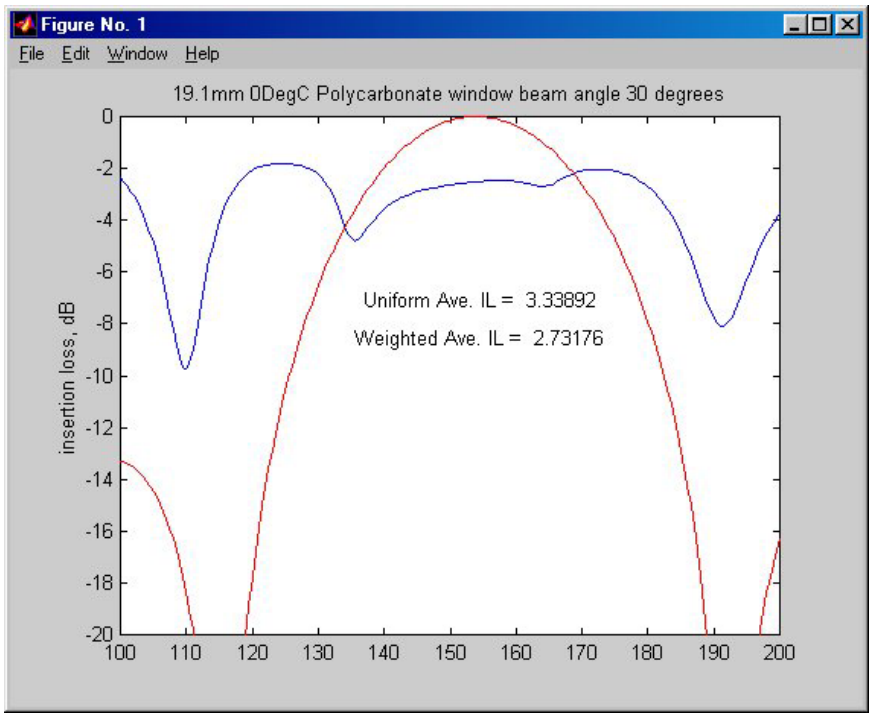

Figure 12. 150kHz Insertion Loss (one-way) with a 19.1mm window at 0°C

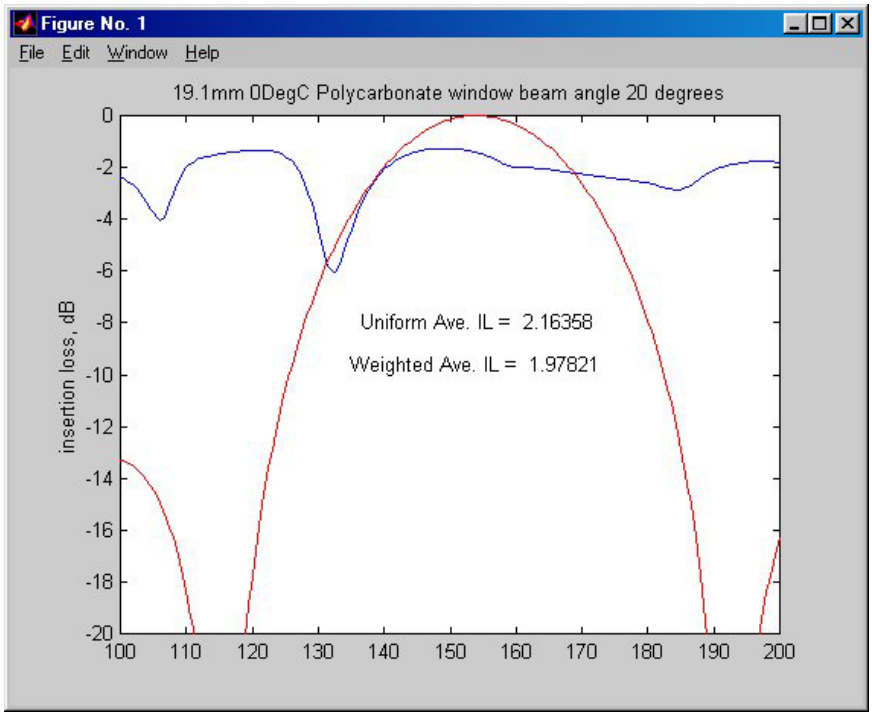

Figure 13. 150kHz Insertion Loss (one-way) with a 19.1mm window at 0°C

5 Conceptual Transducer Well Design

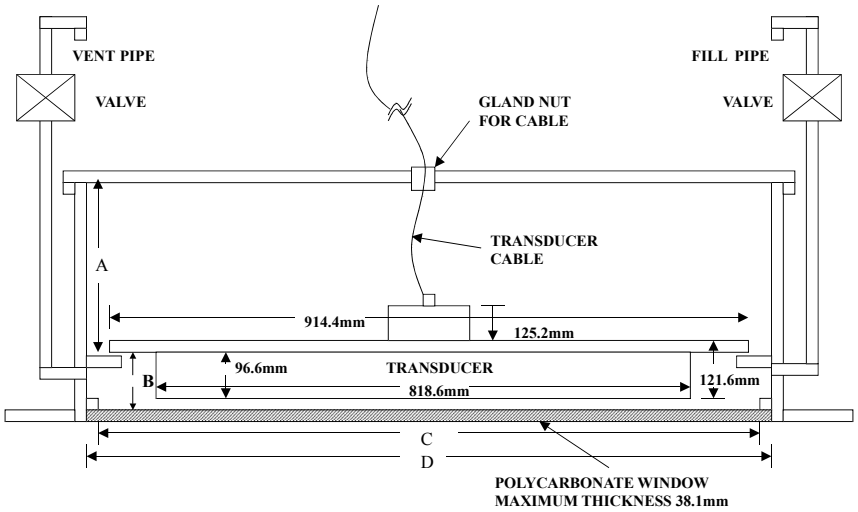

Figure 14. Inside Vessel Mounting - OS 38khz Transducer

Dimension Letter	Option 1 Minimum Dimension	Option 2 Maximum Dimension
A	384mm	738mm
B	103.0mm	109.5m
C	908mm	921mm
D	1010mm	1023mm

Special Notes:

a. No liability is assumed by RD Instruments for users using this conceptual well drawing. Users realize that this drawing is provided as a basis for the user to construct their own well. It is expected that the user will have their well design inspected and approved by a naval architect.

b. The top plate of the well is intended as the primary seal for the vessel. The window and transducer can provide additional seal but should not be considered the primary sealing mechanism for the vessel.

c. This conceptual well drawing is designed such that it would be possible to remove the transducer from inside the vessel. For safety, it is strongly recommended that divers fit a steel plate either over the window or in place of the window before installing or removing the transducer.

d. The listed minimum and maximum dimensions are recommendations based on maintaining the clearance for the transducer as well as providing the smallest well possible.

e. The gasket material between the transducer housing and the vessel flange should be used that will both seal and provide electrical isolation between the transducer housing and the vessel flange. Typical gasket material used is silicone rubber 3-6.35mm thick.

f. Inserts in the transducer housing mounting holes may be used to provide additional isolation from vessel.

g. The walls of the well should be coated with a material to absorb reflected sound in the well. Material such as 3mm wet suit material glued to the inside well walls is satisfactory for this purpose.

h. Vent and fill pipes should be above the water line of the vessel and it is recommended that a gate valve be installed to seal off these pipes.

i. Window thickness should not exceed 38.1 mm of Polycarbonate material. Thinner Polycarbonate window is OK.

j. Window faces should be parallel to the transducer face to within 2 degree for best performance; angle should never exceed 5 degrees.

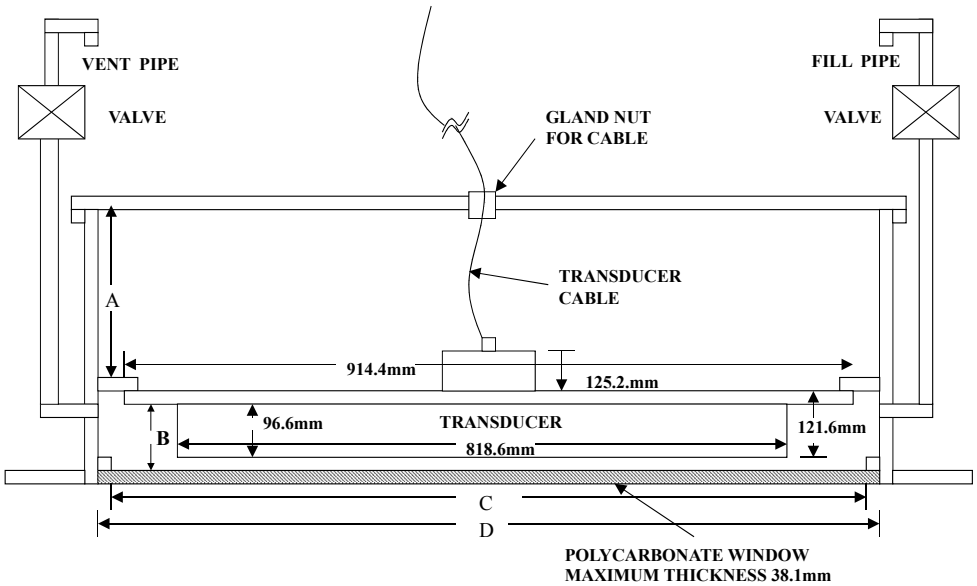

Figure 15. Underneath Vessel Mounting - OS 38khz Transducer

Dimension Letter	Option 1 Minimum Dimension	Option 2 Maximum Dimension
A	384mm	738mm
B	103.0mm	109.5m
C	1016mm	1016mm
D	1118mm	1118mm

Special Notes:

a. No liability is assumed by RD Instruments for users using this conceptual well drawing. Users realize that this drawing is provided as a basis for the user to construct their own well. It is expected that the user will have their well design inspected and approved by a naval architect.

b. The top plate of the well is intended as the primary seal for the vessel. The window and transducer can provide additional seal but should not be considered the primary sealing mechanism for the vessel.

c. This conceptual well drawing is designed such that it would be possible to remove the transducer from inside the vessel. For safety, it is strongly recommended that divers fit a steel plate either over the window or in place of the window before installing or removing the transducer.

d. The listed minimum and maximum dimensions are recommendations based on maintaining the clearance for the transducer as well as providing the smallest well possible.

e. The gasket material between the transducer housing and the vessel flange should be used that will both seal and provide electrical isolation between the transducer housing and the vessel flange. Typical gasket material used is silicone rubber 3-6.35mm thick.

f. Inserts in the transducer housing mounting holes may be used to provide additional isolation from vessel.

g. The walls of the well should be coated with a material to absorb reflected sound in the well. Material such as 3mm wet suit material glued to the inside well walls is satisfactory for this purpose.

h. Vent and fill pipes should be above the water line of the vessel and it is recommended that a gate valve be installed to seal off these pipes.

i. Window thickness should not exceed 38.1 mm of Polycarbonate material. Thinner Polycarbonate window is OK.

j. Window faces should be parallel to the transducer face to within 2 degree for best performance; angle should never exceed 5 degrees.

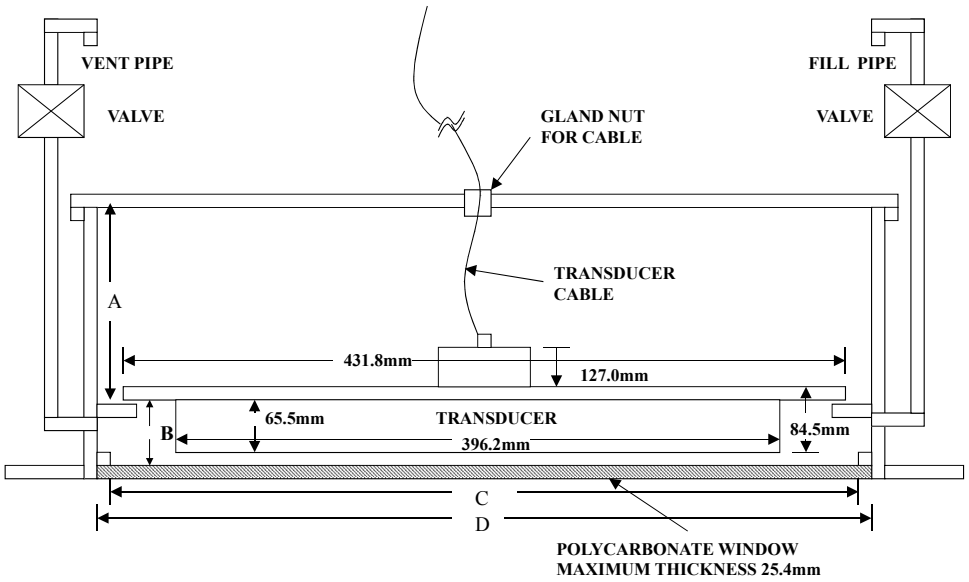

Figure 16. Inside Vessel Mounting - OS 75khz Transducer

Dimension Letter	Option 1 Minimum Dimension	Option 2 Maximum Dimension
A	384mm	738mm
B	71.9mm	78.2mm
C	461mm	474mm
D	563mm	576mm

Special Notes:

a. No liability is assumed by RD Instruments for users using this conceptual well drawing. Users realize that this drawing is provided as a basis for the user to construct their own well. It is expected that the user will have their well design inspected and approved by a naval architect.

b. The top plate of the well is intended as the primary seal for the vessel. The window and transducer can provide additional seal but should not be considered the primary sealing mechanism for the vessel.

c. This conceptual well drawing is designed such that it would be possible to remove the transducer from inside the vessel. For safety, it is strongly recommended that divers fit a steel plate either over the window or in place of the window before installing or removing the transducer.

d. The listed minimum and maximum dimensions are recommendations based on maintaining the clearance for the transducer as well as providing the smallest well possible.

e. The gasket material between the transducer housing and the vessel flange should be used that will both seal and provide electrical isolation between the transducer housing and the vessel flange. Typical gasket material used is silicone rubber 3-6.35mm thick.

f. Inserts in the transducer housing mounting holes may be used to provide additional isolation from vessel.

g. The walls of the well should be coated with a material to absorb reflected sound in the well. Material such as 3mm wet suit material glued to the inside well walls is satisfactory for this purpose.

h. Vent and fill pipes should be above the water line of the vessel and it is recommended that a gate valve be installed to seal off these pipes.

i. Window thickness should not exceed 25.4 mm of Polycarbonate material. Thinner Polycarbonate window is OK.

j. Window faces should be parallel to the transducer face to within 2 degree for best performance; angle should never exceed 5 degrees.

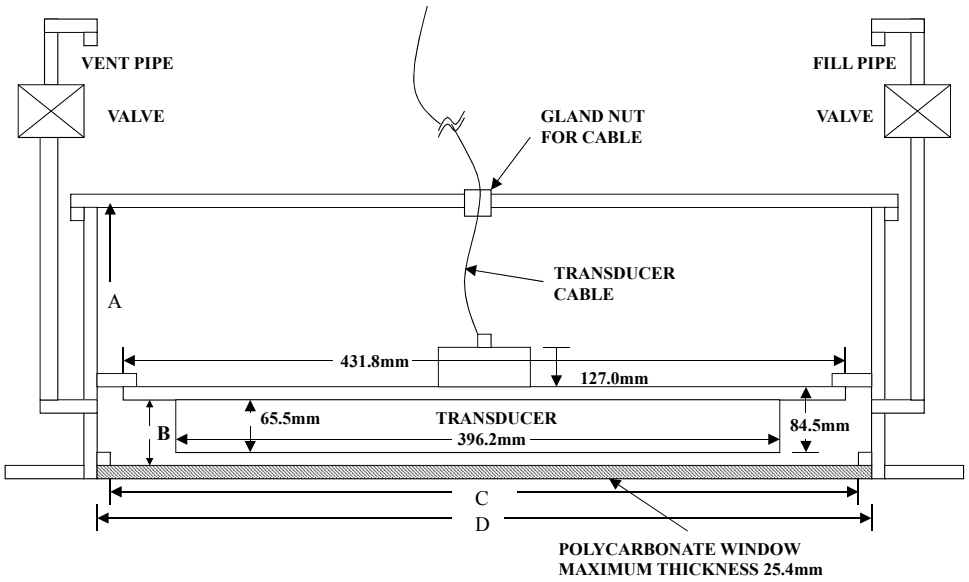

Figure 17. Underneath Vessel Mounting - OS 75khz Transducer

Dimension Letter	Option 1 Minimum Dimension	Option 2 Maximum Dimension
A	384mm	738mm
B	71.9mm	78.2mm
C	533.4mm	533.4mm
D	635mm	635mm

Special Notes:

a. No liability is assumed by RD Instruments for users using this conceptual well drawing. Users realize that this drawing is provided as a basis for the user to construct their own well. It is expected that the user will have their well design inspected and approved by a naval architect.

b. The top plate of the well is intended as the primary seal for the vessel. The window and transducer can provide additional seal but should not be considered the primary sealing mechanism for the vessel.

c. This conceptual well drawing is designed such that it would be possible to remove the transducer from inside the vessel. For safety, it is strongly recommended that divers fit a steel plate either over the window or in place of the window before installing or removing the transducer.

d. The listed minimum and maximum dimensions are recommendations based on maintaining the clearance for the transducer as well as providing the smallest well possible.

e. The gasket material between the transducer housing and the vessel flange should be used that will both seal and provide electrical isolation between the transducer housing and the vessel flange. Typical gasket material used is silicone rubber 3-6.35mm thick.

f. Inserts in the transducer housing mounting holes may be used to provide additional isolation from vessel.

g. The walls of the well should be coated with a material to absorb reflected sound in the well. Material such as 3mm wet suit material glued to the inside well walls is satisfactory for this purpose.

h. Vent and fill pipes should be above the water line of the vessel and it is recommended that a gate valve be installed to seal off these pipes.

i. Window thickness should not exceed 25.4 mm of Polycarbonate material. Thinner Polycarbonate window is OK.

j. Window faces should be parallel to the transducer face to within 2 degree for best performance; angle should never exceed 5 degrees.

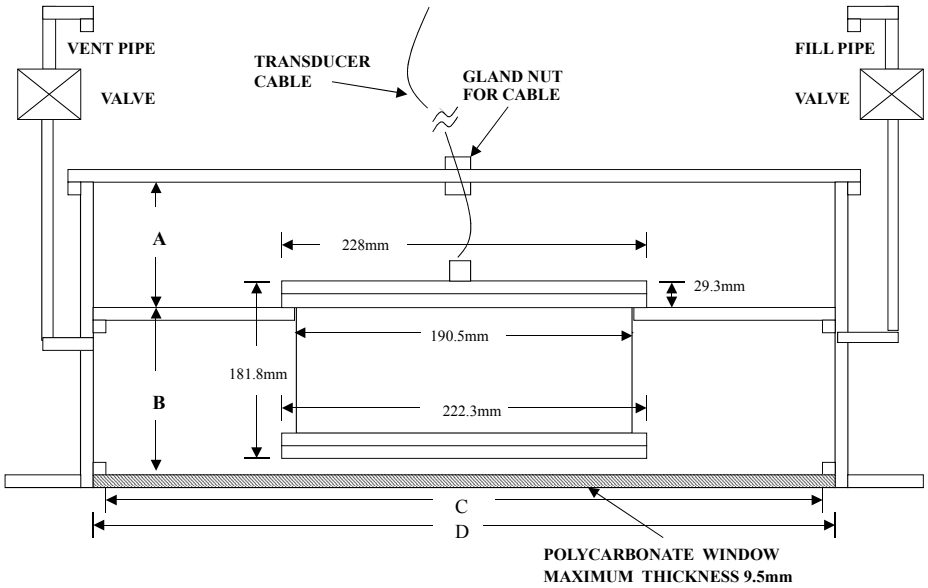

Figure 18. Inside Vessel Mounting - OS 150khz Transducer

Dimension Letter	Option 1 Minimum Dimension	Option 2 Maximum Dimension
A	220mm	400mm
B	158.9mm	165.2mm
C	255mm	268mm
D	356.6mm	369.6mm

Special Notes:

a. No liability is assumed by RD Instruments for users using this conceptual well drawing. Users realize that this drawing is provided as a basis for the user to construct their own well. It is expected that the user will have their well design inspected and approved by a naval architect.

b. The top plate of the well is intended as the primary seal for the vessel. The window and transducer can provide additional seal but should not be considered the primary sealing mechanism for the vessel.

c. This conceptual well drawing is designed such that it would be possible to remove the transducer from inside the vessel. For safety, it is strongly recommended that divers fit a steel plate either over the window or in place of the window before installing or removing the transducer.

d. The listed minimum and maximum dimensions are recommendations based on maintaining the clearance for the transducer as well as providing the smallest well possible.

e. The gasket material between the transducer housing and the vessel flange should be used that will both seal and provide electrical isolation between the transducer housing and the vessel flange. Typical gasket material used is silicone rubber 3-6.35mm thick.

f. Inserts in the transducer housing mounting holes may be used to provide additional isolation from vessel.

g. The walls of the well should be coated with a material to absorb reflected sound in the well. Material such as 3mm wet suit material glued to the inside well walls is satisfactory for this purpose.

h. Vent and fill pipes should be above the water line of the vessel and it is recommended that a gate valve be installed to seal off these pipes.

i. Window thickness should not exceed 9.5 mm of Polycarbonate material. Thinner Polycarbonate window is OK.

j. Window faces should be parallel to the transducer face to within 2 degree for best performance; angle should never exceed 5 degrees.

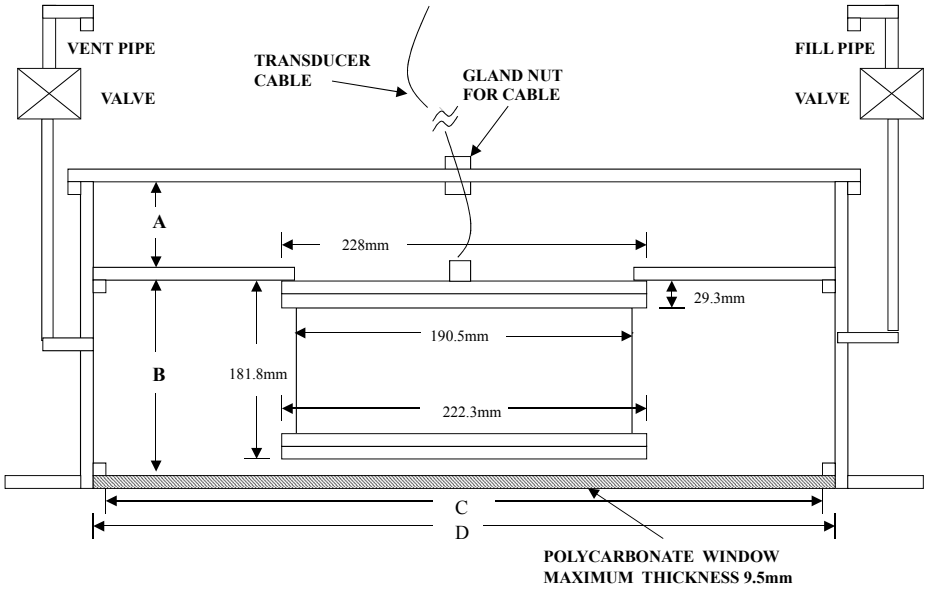

Figure 19. Underneath Vessel Mounting - OS 150khz Transducer

Dimension Letter	Option 1 Minimum Dimension	Option 2 Maximum Dimension
A	195mm	375mm
B	188.2mm	194.5mm
C	324.6mm	324.6mm
D	426.2mm	426.2mm

Special Notes:

a. No liability is assumed by RD Instruments for users using this conceptual well drawing. Users realize that this drawing is provided as a basis for the user to construct their own well. It is expected that the user will have their well design inspected and approved by a naval architect.

b. The top plate of the well is intended as the primary seal for the vessel. The window and transducer can provide additional seal but should not be considered the primary sealing mechanism for the vessel.

c. This conceptual well drawing is designed such that it would be possible to remove the transducer from inside the vessel. For safety, it is strongly recommended that divers fit a steel plate either over the window or in place of the window before installing or removing the transducer.

d. The listed minimum and maximum dimensions are recommendations based on maintaining the clearance for the transducer as well as providing the smallest well possible.

e. The gasket material between the transducer housing and the vessel flange should be used that will both seal and provide electrical isolation between the transducer housing and the vessel flange. Typical gasket material used is silicone rubber 3-6.35mm thick.

f. Inserts in the transducer housing mounting holes may be used to provide additional isolation from vessel.

g. The walls of the well should be coated with a material to absorb reflected sound in the well. Material such as 3mm wet suit material glued to the inside well walls is satisfactory for this purpose.

h. Vent and fill pipes should be above the water line of the vessel and it is recommended that a gate valve be installed to seal off these pipes.

i. Window thickness should not exceed 9.5 mm of Polycarbonate material. Thinner Polycarbonate window is OK.

j. Window faces should be parallel to the transducer face to within 2 degree for best performance; angle should never exceed 5 degrees.

6 Electronics Chassis Mounting Considerations

Place the electronics chassis (see "Outline Installation Drawings," page 61) where there is access to the I/O cable, host computer, gyro interface cable, and navigation interface cable. You can place the rack-mountable chassis in a standard 19-inch cabinet. The chassis needs 90 to 260 VAC to operate (see "Power Considerations," page 52). Allow enough room around the chassis for access, ventilation, and isolation from electronic and magnetic interference.

CAUTION. Do not place the electronic chassis within 3 feet of a computer monitor. Monitors are a major source of electronic interference.

6.1 Cabling Considerations

Several cables connect to the Ocean Surveyor/Observer system (Figure 21, page 33 and Figure 22, page 34). Use care when routing these cables through bulkheads, deck plates, cable runs, and watertight spaces. Make allowances in cable length and engineering design plans for cable routing. When necessary, use strain reliefs on the cables.

The input/output (I/O) cable (Figure 20, page 33 and Figure 23, page 35) connecting the transducer assembly to the electronics chassis has the following specifications.

- Minimum bend radius = 203 mm (8.0 in.)
- Typical cable OD = 19.8 mm (0.78 in.)
- Maximum pull load = 1132 N (250 lb.)
- Maximum length = 100 m (328 ft.)
- Available with either ends having straight or angled connectors or a combination thereof. The transducer-end connector is molded on, so you can use it below the waterline.

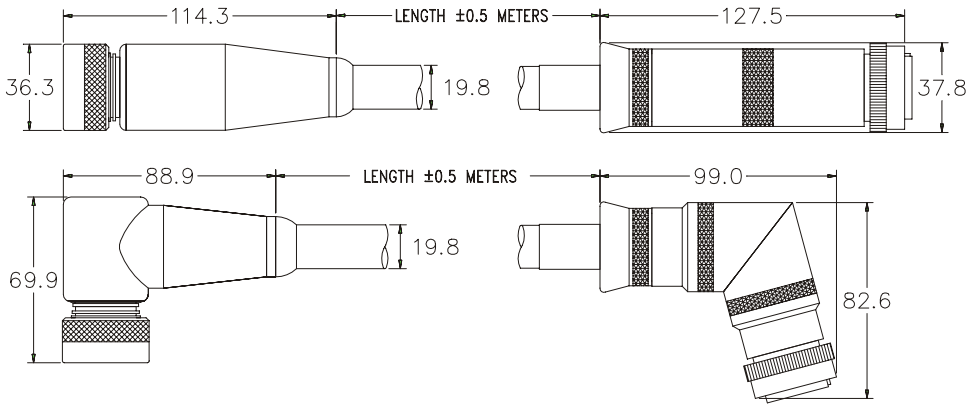

Figure 20. I/O Cable

Route this cable so:

- You can install it with the connectors attached.
- It does not have kinks or sharp bends.
- You can easily replace it if it fails.

> **NOTE.** You can order the cable with the chassis-end connector removed. This allows easier cable routing, but requires you to solder the cable connections at your installation site (see “Dry Connector Installation,” page 36). This is a difficult task.

Other cables that may need routing to the chassis include the computer interface and the gyro interface. Other cables that may need routing to the computer include the navigation interface and the remote display interface.

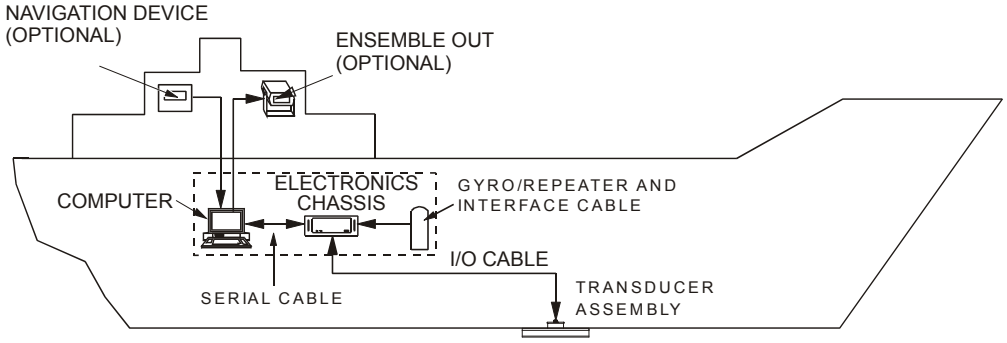

Figure 21. Typical Ocean Surveyor/Observer Interface Cable Layout (Overview)

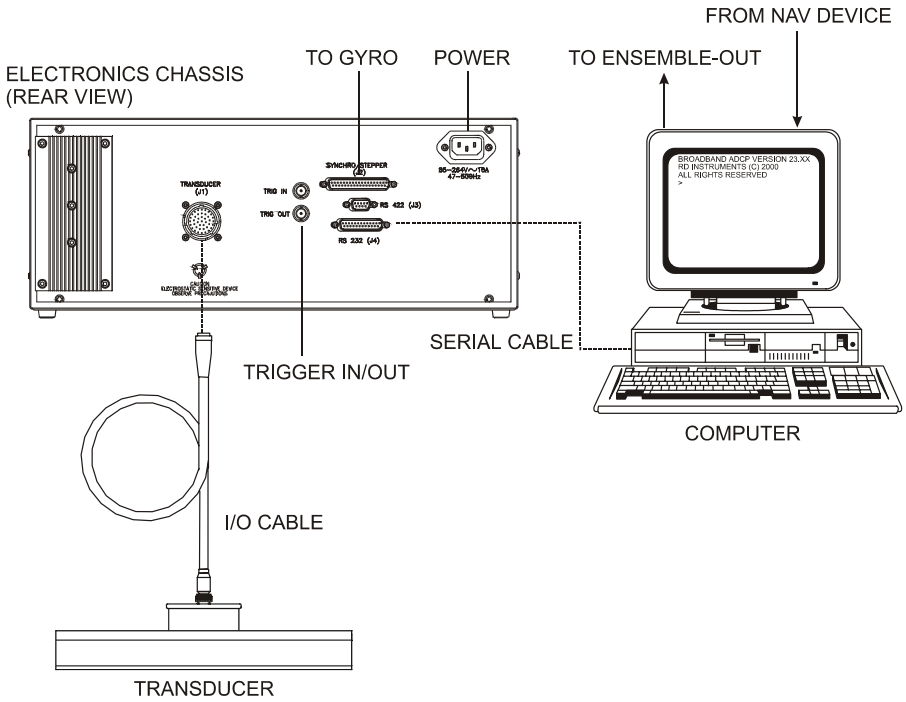

Figure 22. Typical Ocean Surveyor/Observer Interface Cable Layout (Detail View)

6.2 I/O Cable

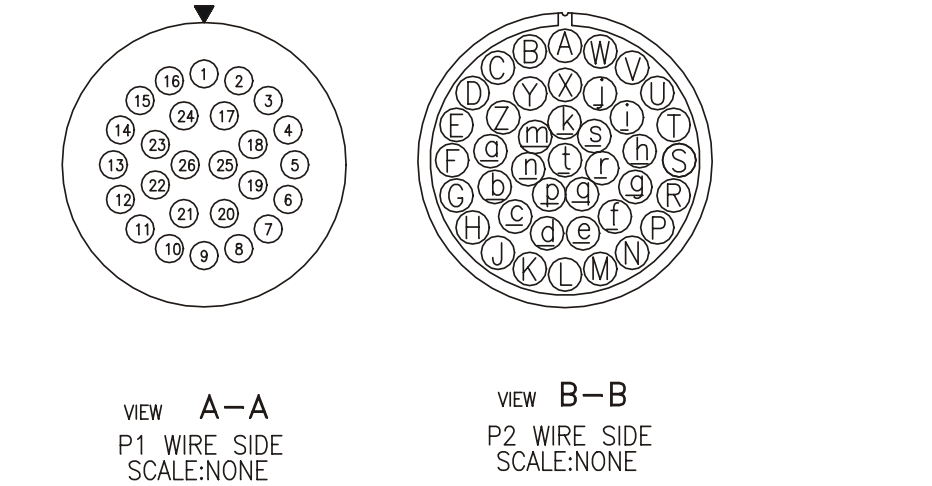

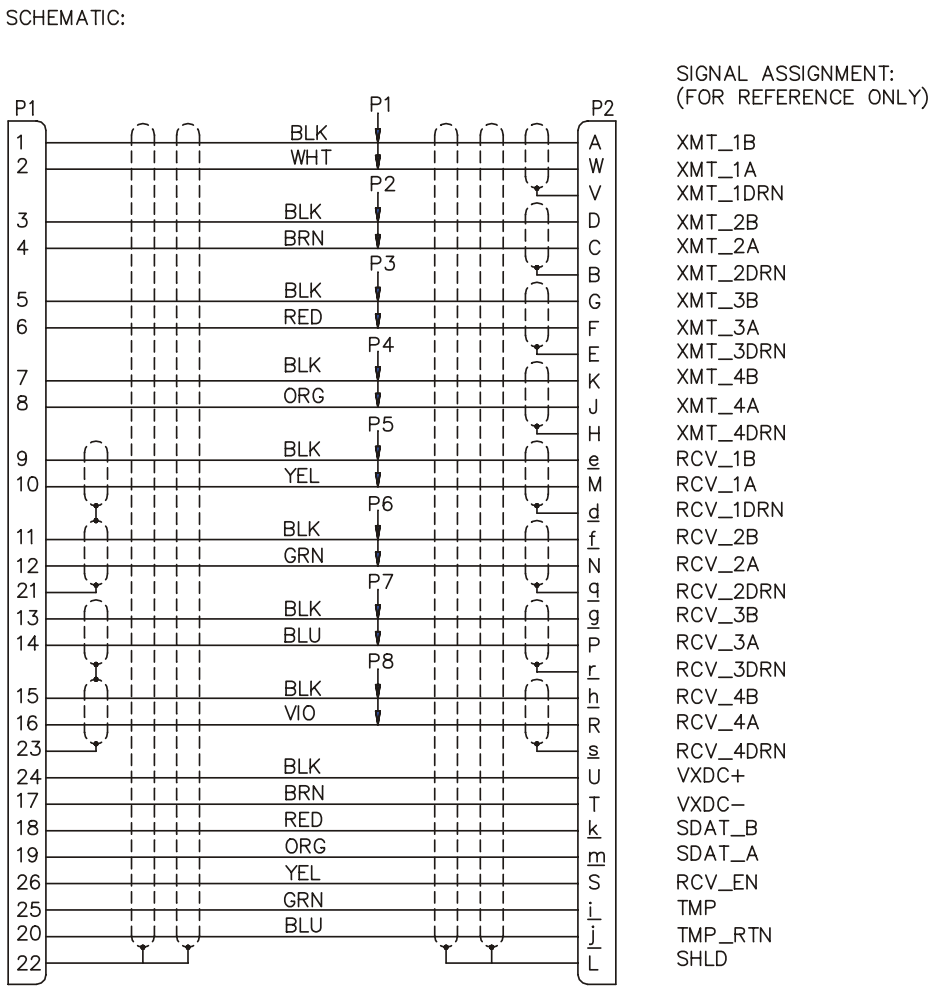

Figure 23. I/O Cable Wiring (73A-6010)

6.3 I/O Cable Identification

Both the OS1 and OS2 Ocean Surveyor/Observer I/O cables use the same raw cable (97A-6002-00). Additionally, the dry end connectors are exactly the same on the OS1 and OS2 cables. The only external difference is the wet end connectors. These are different on the OS1 and OS2 cables. Internally the cables are wired differently. If you are in doubt about what cable to use, see Figure 28 to identify the OS2 cable.

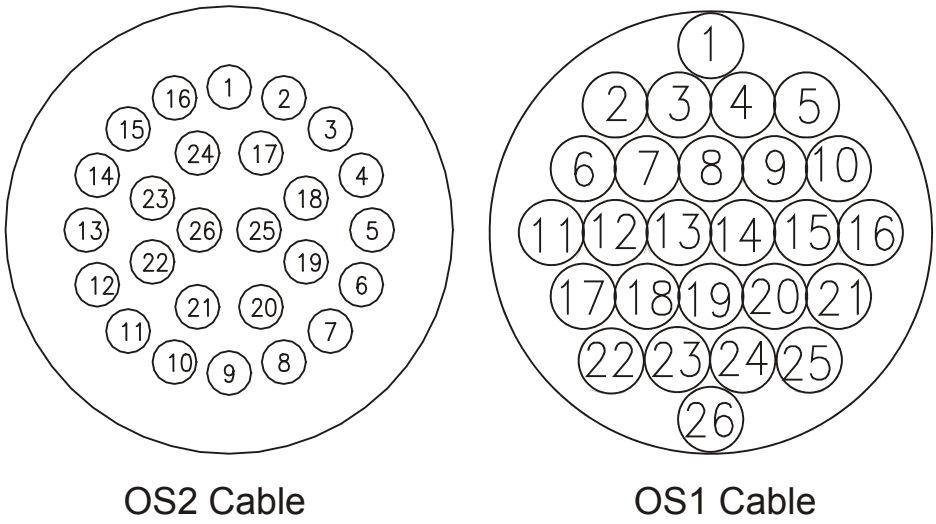

Figure 24. OS2 Versus an OS1 I/O Cable Wet-End Connector

6.4 Dry Connector Installation

The Ocean Surveyor/Observer uses a cable to connect the transducer assembly to the rack mounted electronics chassis. This cable is typically pulled through the vessel inside of conduits that are usually unable to accommodate the dry end connector and its molding. Therefore, many customers purchase the cable without the dry end connector attached. Once the cable has been installed (pulled through the vessel) the dry connector is attached. The following procedure explains the steps required to attach the dry end connector.

6.4.1 Tools and Equipment Requirements (RDI Supplied)

- OS ADCP transducer cable pigtail kit (dry end in bag)
  - 73AK6024-xxx – Straight wet and dry end
  - 73AK6025-xxx – Straight wet, angled dry end
  - 73AK6026-xxx – Angled wet, straight dry end
  - 73AK6027-xxx – Angled wet and dry end
- OS 41-pin dry end cable connector 85106RC2041P50 with pins

6.4.2 Tools and Equipment Requirements (User Supplied)

- Standard wire strippers for 18 - 22 awg wire.
- Wire cutters
- 9 pieces of 22awg stranded Teflon coated wire approximately 8 inches in length.
- The following items can be purchased from:

  Daniels Manufacturing Corporation
  526 Thorpe Road
  Orlando, FL 32824
  Phone: (407) 855-6161
  Fax: (407) 855-6884
  Web Site: www.dmctools.com

- Crimping tool: AF8 M22520/1-01 ($179.63)
- Turret Head TH1A: M22520/1-02 ($63.87)
- Extraction Tool: MS24256R20 (DRK20) $23.23
- Insertion Tool: MS24256A20 (DAK20) $17.52

6.4.3 Installation Instructions

The following are RD Instruments' recommended steps for installation and check out of the dry end cable connector.

NOTE. This procedure assumes that the user is familiar with good soldering practices and will use an approved soldering station.

a. Strip back the black polyurethane jacket back approximately 20.3cm (8 inches).

CAUTION. Be careful that you do not cut off the outer shield.

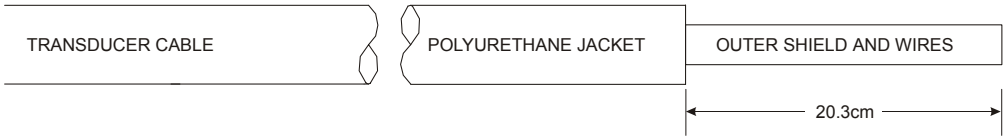

b. Slice the outer shield down one side starting from the polyurethane jacket out to the end of the cable. This will allow the shield to be opened up and separated from the rest of the wires. DO NOT cut off the shield wire.

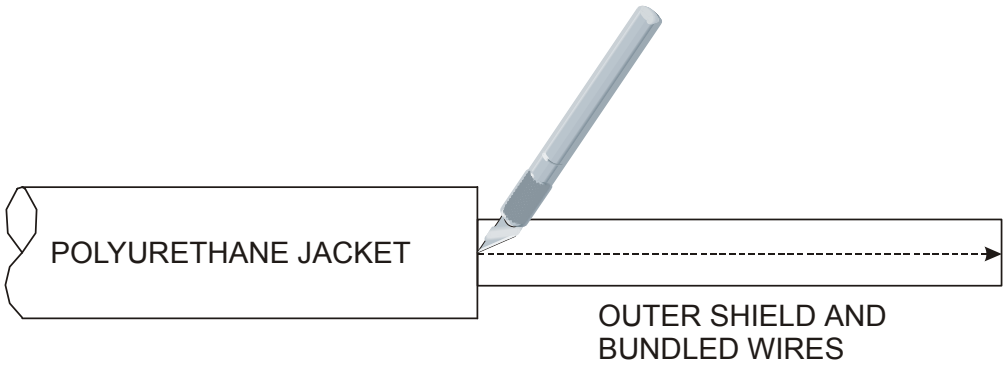

c. Carefully twist the outer shield so that all loose strands of the shield are twisted together and so that the shield wire is twisted to the polyurethane jacket.

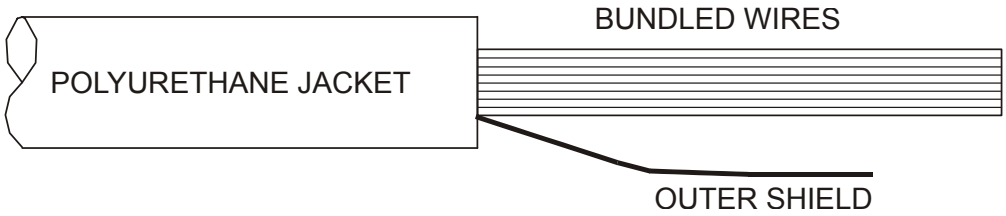

d. Remove the protect wrap from the remaining bundled wires.

e. Separate the single wires from the 8 twisted shielded pairs.

f. Strip back the insulation on the single wires approximately 0.64cm (0.25 in.) and using the crimping tool crimp a pin on each wire.

g. Strip back the shield on each of the shield pairs approximately 5.1cm (2.0 in.). Again be sure that you do not cut off the shield.

h. Slice and twist the shield on each of the pairs as you did in steps b and c.

i. Solder one piece of the 22awg Teflon coated wire to each of the shields (outer shield and each shields from the twisted shielded pairs).

j. Cut the ends of the 22awg Teflon coated wire so that their length match the length of the other wires in the cable.

k. Strip back the insulation on each of the shielded pair wires and the individual wires of the cable by approximately 0.05mm (0.2 in.) and then crimp on the pins. You must use the proper crimping tool (Crimping tool: AF8 M22520/1-01and Turret Head TH1A: M22520/1-02) as stated in the beginning of this procedure.

NOTE. Do not solder the wires as this will cause the pin to be deformed and it will not fit into the connector.

l. Repeat step k for each of the wires to be inserted in the dry end connector.

m. Insert the pins in the connector using the insertion tool (MS24256A20 (DAK20)). The pin out configuration is shown in Figure 23, page 35.

> **NOTE.** You must start from the center of the connector and work your way out. Failure to insert the pins in this order will cause you to bend and break the wires off of the pins.

n. When all wires have been inserted, confirm that the connector has been wired properly by performing an end-to-end resistance check. Be sure to also check for shorts to adjacent pins. This can be done by simply checking for >2Mohms of resistance between each of the dry end pins.

   In some installations it is not possible to perform the end-to-end resistance check because of the distance between the connectors. If this is the case in your installation then the following method can be used.

   1. Confirm that all pins in the dry end connector are not shorted. Checking for >2Mohms of resistance between each of the dry end pins.
   2. Find a paper clip or other metal pin that can be inserted into the wet end connector pins without damaging or deforming the pin sockets in the connector.
   3. Short pins 1 and 2 of the wet end connector with the item you found for step 2. Confirm that the associated dry end pins are shorted together (<10ohms).
   4. Short pins 1 and 3 together of the wet end connector with the item you found for step 2. This step confirms that pins 1, 2, and 3 are wired properly.
   5. Short pins 1 and 4 together of the wet end connector with the item you found for step 2. This step confirms that pin 4 is wired properly.
   6. Repeat step 5 for each of the remaining pins in the wet end connector. Each time, use pin 1 as the reference and then the other pin will be the pin that has not been tested yet.

6.5 Using Trigger-In and Trigger-Out

The Trigger Input allows the Ocean Surveyor/Observer to be synchronized by an external +5Vlogic level signal. The minimum duration for the Trigger Input is 1ms. The Input resistance is at least 2.7 kOhm. The Trigger Output is a +5V logic level signal as well. The nominal source resistance of the Trigger Output is 50 Ohms.

The Trigger Output and Input is controlled by the *CX a,b* command, where *a* controls the Trigger Input mode, and *b* the Trigger Output mode. For flexibility, several modes for the Trigger Input and Output operation have been implemented. See Table 4, page 41 for a description of the command.

NOTE. Trigger-In is available only for systems using firmware version 23.xx or later and using the new electronics chassis back panel.

The Trigger In and Trigger Out B-N-C connectors use the center post as the signal input. The outside of the B-N-C connector is used for ground.

The ADCP performs a cycle of reading sensors (known as overhead), transmitting, blanking, processing, and sleep for each ping. When the CX command is enabled (by any setting of CX other than CX0,0), the ADCP will enter a transmit trigger wait state just before the transmitting portion of the cycle. It is during this wait state that the *Trigger In* input is read by the ADCP. This results in the following caution:

CAUTION. The ADCP does not store trigger in inputs. This means that the ADCP will only acknowledge pulses it sees during the transmit trigger wait state. For example, if 3 trigger in pulses were sent to the ADCP in quick succession only the pulse that occurred during the transmit trigger wait state would be used. The other pulses would be ignored and lost.

The setting of the CX command tells the ADCP what type of input signal (either pulse or a DC level) will be sent as the trigger. The following are the available inputs:

Table 4: Trigger-In Input/Output Signals

Command	Action:	Description
CX 0,b	Trigger Input off	Normal operating mode.
CX 1,b	Positive edge Trigger Input	Used if Ocean Surveyor/Observer is to be Triggered by other equipment. One ping is executed on every rising edge of the Trigger signal. Care has to be taken by the user not to exceed the maximum allowable transmit duty cycle of 15%.
CX 2,b	Negative edge Trigger Input	Used if Ocean Surveyor/Observer to be Triggered by other equipment. One ping is executed on every falling edge of the Trigger signal. Care has to be taken by the user not to exceed the maximum allowable transmit duty cycle of 15%.
CX 3,b	Any edge Trigger Input	Used if Ocean Surveyor/Observer to be Triggered by other equipment. One ping is executed on every rising and falling edge of the Trigger signal. Care has to be taken by the user not to exceed the maximum allowable transmit duty cycle of 15%.
CX 4,b	High level Trigger Input	Used if Ocean Surveyor/Observer to be Triggered by other equipment. The OS transmits pings as long as the positive level of the Trigger signal is present. In this way, a single ping or multiple pings can be transmitted depending on the duration of the positive level. Care has to be taken by the user not to exceed the maximum allowable transmit duty cycle of 15%. A time between pings has to be set for cases where multiple pings should be transmitted.
CX 5,b	Low level Trigger Input	Same as CX 4,b except the Trigger is active at the low-level of the Trigger signal. Care has to be taken by the user not to exceed the maximum allowable transmit duty cycle of 15%. A time between pings has to be set for cases where multiple pings should be transmitted.
CX a,0	Trigger Output off	Normal operating mode.
CX a,1	Trigger Output – XMT	The Trigger Output is at a high level during the time the Ocean Surveyor/Observer transmits.
CX a,2	Trigger Output – RCV	The Trigger Output is at a high level during the time the Ocean Surveyor/Observer receives.
CX a,3	Trigger Output – X/R	The Trigger Output is at a high level during the time the Ocean Surveyor/Observer transmits and receives.
CX a,4	Trigger Output – inverted X/R Trigger	Identical to CX a,3, except the signal is inverted. The Trigger Output is at a high level while the OS is *not* transmitting or receiving.

7 Computer Considerations

We designed the Ocean Surveyor/Observer system to use a Windows® compatible computer. The computer controls the ADCP and displays its data, usually through our *VmDas* program. Table 5, page 42 lists the minimum computer requirements.

NOTE. It is highly recommended that you download and install all of the critical updates, recommended updates, and the service releases for the version of Windows® that you are using prior to installing any RDI software.

Table 5: Minimum Computer Hardware Requirements (two COM Ports only)

Windows® 95 (see note), Windows® 98, Windows® NT 4.0 with Service Pack 4 installed, Windows® 2000, or Windows® XP
Pentium class PC 233MHz (350 MHz or higher recommended)
32 megabytes of RAM (64 MB RAM recommended)
6 MB Free Disk Space (20MB recommended)
Two Serial Comports (two High Speed UART Serial Comports recommended)
Minimum display resolution of 800 x 600, 256 color (1024 x 768 or higher recommended)

NOTE. VmDas has special system requirements when using Windows® 95. See the *VmDas* User's Guide for details.

Table 6: Recommended Computer Configuration

Windows® NT 4.0 with Service Pack 4 installed, Windows® 2000, or Windows® XP
Intel Pentium III 600 MHz or higher
256 megabytes of RAM (500 MB RAM recommended)
1 GB Free Disk Space (20GB recommended)
Four Serial Comports (High Speed UART Serial Comports recommended)
Display resolution of 1024 x 768, 32 bit or higher recommended, 32MB video memory

The computer configuration varies depending of the number of communication ports and the external data refresh rate. Serial communications require a lot of processor resources, and the minimum requirements can vary. A good quality video card is required to operate *VmDas* and *WinADCP* simultaneously. We do not use graphic card 3D functions, however, video memory is needed to display all graphics.

However, with experience we can recommend that:

- If you are using more than two communication ports, you should not use a Celeron processor.
- Intel Pentium III processors work best to operate the ADCP and give access to display and keyboard without losing ensembles.

CAUTION. Do not place the computer monitor within 3 feet of the electronic chassis. Monitors are a major source of electronic interference.

8 Gyrocompass Interface Considerations

Vessel Mounted ADCPs do not contain any sensors for measuring heading, pitch, and roll. The vessel must provide this information. There are two ways to interface sensor data such as heading, pitch, and roll information with the ADCP data, either by an analog signal input or by a serial ASCII input. Further details of these interfaces are as follows.

a. Single or multi-turn synchro heading outputs and single-turn synchro tilt sensor outputs for pitch and roll or

b. Stepper heading outputs and single-turn synchro tilt sensor outputs for pitch and roll.

c. Serial ASCII data input to the host computer running the RDI ADCP software that conforms to one of the following NMEA standards.

- $_ _ HDT (NMEA 0183 standard of true heading only)
- $_ _ HDM (NMEA 0183 standard of magnetic heading only)
- $PRDID (RDI proprietary NMEA string supporting heading, pitch, and roll)

8.1 Overview of the ADCP Gyro Interface

A Gyro Interface board (Figure 25, page 45) is installed in the Electronic Chassis to provide attitude data for the ADCP. ADCPs can use gyro analog outputs to obtain heading, roll, and pitch data. The advantage to these options is that gyro outputs can be used on vessels where flux-gate heading sensors and pendulums cannot. This is due to effects from the hull on a flux gate compass and the acceleration of the ship on pendulum pitch and roll sensors. Table 7, page 44 lists the gyro interface options.

Use the RD-SIC-0 option when only *stepper* heading is available. Use the RD-SIC-1 option when either *synchro* or *stepper* heading is available. This option supports single-turn (1:1), multi-turn (36:1, 90:1, 360:1), and stepper voltage outputs from a ship's gyro or portable gyro. Use the RD-SIC-3 option with a gyro capable of resolving motion across the vertical plane (i.e., tilt synchro gyro). With the RD-SIC-3 option, you can use one of the following:

- Single or multi-turn synchro heading outputs and single-turn synchro tilt sensor outputs for pitch and roll
- Stepper heading outputs and single-turn synchro tilt sensor outputs for pitch and roll.

The Gyro Interface board uses up to three synchro-to-digital (S/D) converter chips. A resistor network is used to configure the board for the input synchro stator voltages, and a DIP-switch is used to configure the board for

the turns ratio of a specific gyro. The S/D chip supports a wide range of input synchro frequencies (50, 60, and 400 Hz).

We usually configure the Gyro Interface board at the factory to customer specifications for synchro stator voltage and gyro turns ratio. Table 8 lists the acceptable standard configurations. Sometimes, though, the customer chooses to use a gyro other than the one originally specified. Because of the need to change the gyro interface configuration "in the field," we provide technical information in this section.

Table 7: Gyro Interface Options by Model

Inputs Allowed	Natel chips	Typical Use
1 (RD-SIC-0)	0	Stepper heading only
1 (RD-SIC-1)	1	Synchro or Stepper heading only
3 (RD-SIC-3)	3	Synchro or Stepper heading, AND Synchro-only pitch and roll

Table 8: Acceptable Gyro Interface Configurations

Gyro Heading Input (Synchro)	
Frequency Input	50Hz, 60Hz, or 400Hz
Stator Voltages	Through a variable scaling resistor package, the stator voltage can vary. Starting with a minimum voltage of 11.6 volts RMS, the most common voltages are 11.8, 26, 50, and 90 volts RMS.
Reference Voltages	20 to 150 VAC
Turns Ratios supported	Through a selectable DIP switch, the turns ratio can be 1:1, 36:1, 90:1, and 360:1
Gyro Heading Input (Stepper)	
Input Voltages	Most common ranges are from 35 to 70 VDC, with a positive or negative common. On special request, other voltages may be possible.
Stepper Ratio	Only a 6-step gyro can be used, where each step stands for 1/6 of a degree. See table below. ST0 ST1 ST2 DEGREE 1 1 0 (0/6) 0.000 1 0 0 (1/6) 0.167 1 0 1 (2/6) 0.333 0 0 1 (3/6) 0.500 0 1 1 (4/6) 0.667 0 1 0 (5/6) 0.833
Gyro Tilt Input (Synchro Only)	
Input Frequency	50Hz, 60Hz, or 400Hz
Stator Voltages	Through a variable scaling resistor package, the stator voltage can vary. Starting with a minimum voltage of 11.6 volts RMS, the most common voltages are 11.8, 26, 50, and 90 volts RMS.
Reference Voltages	20 to 150 VAC
Turns Ratio	1:1 only

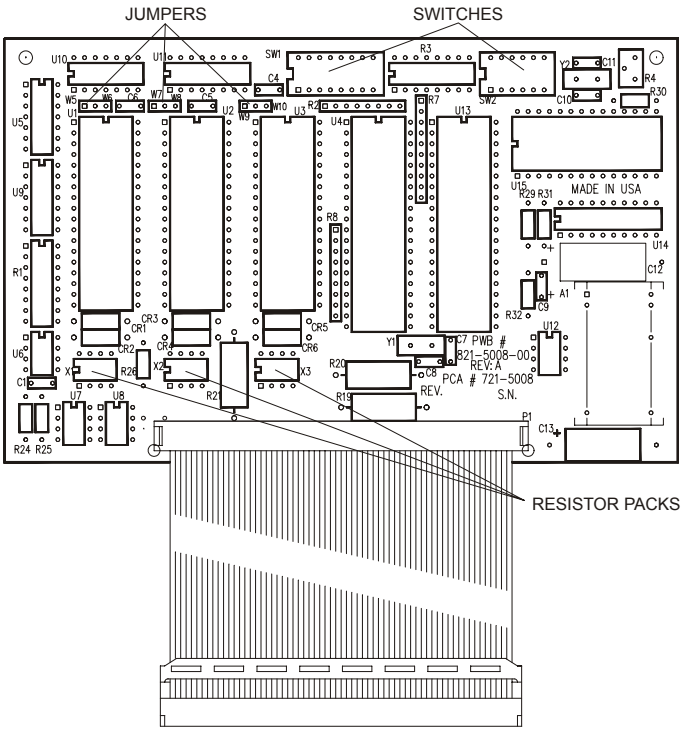

Figure 25. Gyro Interface Board

8.1.1 Determining the Synchro Stator Voltage

The best way to find the synchro stator voltage is to use the value listed in the gyro manual. If the manual does not list this value, you can determine the stator voltage by using an AC voltmeter and doing some calculations. After finding the stator voltage requirements, you will install one or more scaling-resistor packs on the Gyro Interface board. If you already know the stator voltage requirements, skip the rest of this section and go to "Determining the Size of the Scaling-Resistor Pack," page 46 to find the size of the scaling-resistor pack.

a. With the gyro synchro at a constant angle, measure the AC voltage across the following sets of leads. You must maintain this constant angle during your readings.

   1. S1 to S2:_____ VAC = S_{12}
   2. S2 to S3:_____ VAC = S_{23}
   3. S3 to S1:_____ VAC = S_{31}

b. Calculate the RMS stator voltage, V_S:

$$V_S = \left[\frac{S_{12}^{\ 2} + S_{23}^{\ 2} + S_{31}^{\ 2}}{1.5} \right]^{1/2} = \textit{RMS stator voltage}$$

Usually, V_S will be a common stator voltage (11.8, 26.0, 50.0, or 90.0). If V_S is about equal to one of these values, you can probably assume your gyro is using a common value. If you are unsure of your readings, retake them at a different gyro angle and re-compute V_S. If you know your gyro is using an *uncommon* stator voltage value, you can still modify the scaling-resistor pack value for use with the Gyro Interface board (see "Determining the Size of the Scaling-Resistor Pack," page 46).

Verify the synchro stator voltages are within acceptable limits.

Each stator-pair voltage (S_{12}, S_{23}, and S_{31}) must be less than or equal to V_S.

All pairs of synchro stator voltages must be within the limits given below. For example, the check for one such pair is

$$0.7071 \leq \frac{(S_{12}^2 + S_{23}^2)^{1/2}}{V_S} \leq 1.2247$$

If these voltage checks are not within acceptable limits, then the synchro output is bad, the voltage measurements were incorrect, or the synchro angle was not constant during readings.

8.1.2 Determining the Size of the Scaling-Resistor Pack

As explained earlier, most synchros use one of the standard synchro stator voltages (V_S) listed in Table 9. The Gyro Interface board will work with any of these voltages by using the associated scaling-resistor pack to adjust the stator voltage input rating to 11.8 VAC.

Table 9: Standard Synchro Stator Voltages and Scaling Resistance

Common synchro stator reference voltages	Scaling resistance
11.8 VAC	0.0 kΩ (jumper)
26.0 VAC	39.2 kΩ, 1/8 W
50.0 VAC	100.0 kΩ, 1/8 W
90.0 VAC	221.0 kΩ, 1/8 W

If the gyro is using non-standard stator voltages, you can find the scaling resistance with the following equation.

$$R = (V_S - 11.8\ VAC)\ x\ (2.76\ k\Omega)$$

The tolerance for this can be as large as 10%, but the four resistors in the scaling-resistor pack must be within 0.1% *of one another*. For example, the exact scaling-resistance value for a V_S of 50.0 VAC is 105.4 kΩ. However, resistor values of 100 kΩ are more common. Because this value is within

10% of the calculated value, you can use four 100-kΩ resistors for the scaling-resistor pack if they are within 0.1% of one another.

CAUTION. If you configure the gyro interface board for a lower voltage than the actual synchro stator voltage, you could damage the board or the ADCP.

8.1.3 Installing the Scaling-Resistor Pack and W-Jumpers

After calculating the size of the scaling-resistor pack, you are ready to install the pack on the Gyro Interface board (Figure 25, page 45). Before you can install the scaling-resistor pack, you may have to change the resistors now in the pack. To do so, pull the resistor pack out of its socket on the Gyro Interface board, unsolder the old resistors, and install the new resistors. When the scaling-resistor pack has the correct resistors soldered in place, re-install the pack in its socket. Also, make sure the appropriate W-jumpers are installed. Table 10 lists the associated resistor sockets and W-jumpers.

Table 10: Natel Chip, Resistor Pack, and W-jumper Sockets

Function	Natel chip socket	Resistor pack socket	W-jumper socket
Pitch	U1	X1	W5
Roll	U2	X2	W7
Heading	U3	X3	W9

8.1.4 Determining and Setting the Synchro Turns Ratio

The best way to find the synchro turns ratio is to use the value listed in the gyro manual. If the manual does not list this value, you may have to experiment by trying the various settings on the Gyro Interface board. Table 11, page 48 lists the available turns ratios and their switch settings. To set the turns ratio, set the poles of switch S1 on the Gyro Interface board (Figure 25, page 45) to the appropriate position.

If you are guessing, try a 1:1 turns ratio first. The reason you want to use a 1:1 turns ratio is so you do not have to enter a heading bias (or initialization) value in any software program you are using or adjustment on the front panel. That is, whenever you use a *non-1:1 turns ratio* or a *stepper* voltage, it is possible for the Gyro Interface board to be out of alignment with the heading synchro. For example, if the ship's heading is 027° when you initialize the ADCP, the misalignment between the gyro and the Gyro Interface board will be 27°. When a misalignment condition occurs, you must account for the misalignment by either the front panel set **Up**/**Down** button, or in the software program you are using. You can use the Ocean Surveyor/Observer ADCP EV-command (Heading Bias) to align the Gyro

Interface board to the gyro if you do not have the ability to initialize the Ocean Surveyor/Observer ADCP through the front panel or in the software. Once set, the heading bias value is valid until you turn off the ADCP or gyro.

Table 11: Gyro Interface Switch 1 Settings

Turns ratio	P1	P2	P3	P4	P5	P6	P7	P8
1:1	C	O	C	O	O	C	C	C
36:1	C	O	C	O	O	O	C	C
90:1	C	O	C	O	O	C	O	C
360:1	C	O	C	O	O	O	O	C
Stepper enable	O	C	O	C	O	O	O	O

C = CLOSED O = OPEN

Table 12: Gyro Interface Switch 2 Settings

Pole	Setting	Function		
P1	C	Enables pitch and roll on the synchro board		
	O	Disabled pitch and roll on the synchro board		
P2-3	Baud rate	Baud rate	P2	P3
		2400	O	O
		4800	O	C
		9600	C	O
		19200	C	C
P4-5	Display rate	Display rate	P4	P5
		Continuous	O	O
		10 times per second	O	C
		2 times per second	C	O
		Once per second	C	C
P6	Not used			

8.2 Stepper Interface

If you are using a *stepper* voltage instead of a synchro voltage, remove the Synchro-to-Digital chip in socket U3 on the Gyro Interface board. Be sure to protect the S/D chip from static discharge.

CAUTION. Synchro-to-Digital converter chips are **expensive**, so handle them with care.

Remember the following items when using the stepper interface

- Only a 6-step gyro can be used, where each step stands for 1/6 of a degree. See Table 8, page 44.
- If you are using roll and pitch inputs from a vertical gyro, the turns ratios for these inputs ***must*** be 1:1.
- Most common stepper voltage ranges are from 35 to 70 VDC, with a positive or negative common and this is what the gyro interface board is setup for from the factory. On special request, other voltages are possible. The gyro Interface board uses resistors R19, R20, and R21 to set the current for the opto isolators on the stepper interface. Use the following table to determine the correct value of these resistors.

Table 13: Stepper Voltage Range

Stepper Voltage	Resistor Value	Watt
35 to 70 VDC	8.2kΩ	1
20 to 35 VDC	4.0kΩ	1
70 to 110 VDC	16.0KΩ	2

8.3 Testing the Gyro Interface

You can use the front LCD display on the Electronic Chassis to test the gyro interface. Turn on the Electronic Chassis. If the LCD heading readout agrees with the gyro at several angles, you can assume the settings are correct. You also should have the gyro make a complete turn through 360°. Some lag may appear, but the LCD readout should change smoothly and in the same direction as the gyro.

If you do *not* have a 1:1 turns-ratio synchro input, and the LCD readout follows in the same direction but with a constant offset from the gyro value, you must use the initializing **Up**, **Down**, and **SET** buttons on the front of the Electronic Chassis. This entry will align the two values when properly set or one of two problems can exist.

NOTE. If you do not have the initializing buttons on the electronic chassis, then you can set the offset in the *VmDas* **Transforms** tab (see the *VmDas* User's Guide). If you are not using RDI's *VmDas* program you can set the offset through the EV command (see the Ocean Surveyor/Observer Commands and Output Data Format guide).

- Incorrect turns-ratio value - If you are *not* sure of the turns ratio, try selecting the other turns-ratio values and retest the configuration.

CAUTION. Be sure to power down the Electronic Chassis *before* changing the switch settings. You also should secure the gyro signals to the Electronic Chassis, as these signals are still "live" at the Gyro Interface board terminals.

- Incorrect wiring hookup to gyro - If you *are* sure of the turns-ratio (i.e., found in gyro manual), the problem must be incorrect wiring. That is, the stator lines (S1, S2, S3) or reference lines (RH, RL) may be connected to the wrong gyro terminals. Use Table 14 or systematically swap pairs of stator or reference leads to correct wiring problems.

Table 14: Gyro Interface Troubleshooting Guide

"A" Gyro angle	"B" Angle displayed by heading readout (Shaded areas indicate reverse rotation)											
000	000	120	240	240	000	120	180	300	060	060	180	300
060	060	180	300	180	300	060	240	000	120	000	120	240
120	120	240	000	120	240	000	300	060	180	300	060	180
180	180	300	060	060	180	300	000	120	240	240	000	120
240	240	000	120	000	120	240	060	180	300	180	300	060
300	300	060	180	300	060	180	120	240	000	120	240	000
Gyro conn.	"C" Possible ADCP Connector Configurations											
	1	2	3	4	5	6	7	8	9	10	11	12
RH	RH	RH	RH	RH	RH	RH	RL	RL	RL	RL	RL	RL
RL	RL	RL	RL	RL	RL	RL	RH	RH	RH	RH	RH	RH
S1	S1	S2	S3	S2	S3	S1	S1	S2	S3	S2	S3	S1
S2	S2	S3	S1	S1	S2	S3	S2	S3	S1	S1	S2	S3
S3	S3	S1	S2	S3	S1	S2	S3	S1	S2	S3	S1	S2

NOTE

1. With a gyro angle of "a," the heading readout will show an angle of "b" if the gyro interface cable wires are connected as shown in "c." For example - if the gyro is at an angle of 120° ("a"), and the heading readout is showing a value of 300° ("b"), the interface is wired in either configuration #7 or #10 ("c"). If the heading readings rotate in the same direction as the gyro, the interface is wired as #7; if the rotation is in the reverse direction, the interface is wired as #10.
2. As shown above, only configuration #1 in "c" is correct for gyro interface wiring.
3. Configurations 7-12 occurs when reference wires RH and RL are reversed, producing errors of 180°.
4. Configurations 2, 3, 8, and 9 occur when the S1-S2-S3 wires are rotated, producing errors of 120°.
5. Switching any two of the S1-S2-S3 wires, as in configurations 4, 5, 6, 10, 11, and 12 (shaded in table), causes synchro rotation to be reversed, and results in errors of varying degrees.
6. Setting the gyro to 000° will produce an offset that is a multiple of 60° for all possible wiring configurations.
7. Leaving any of the S1-S2-S3 connections "open" will give unpredictable results.

8.4 Gyro Cable

This section has information on the gyro cable. Special user-requests may cause changes to the basic wiring system and may not be shown here. We provide this list only as a guide in troubleshooting the gyro interface. If you feel there is a conflict, contact RDI for specific information about your system.

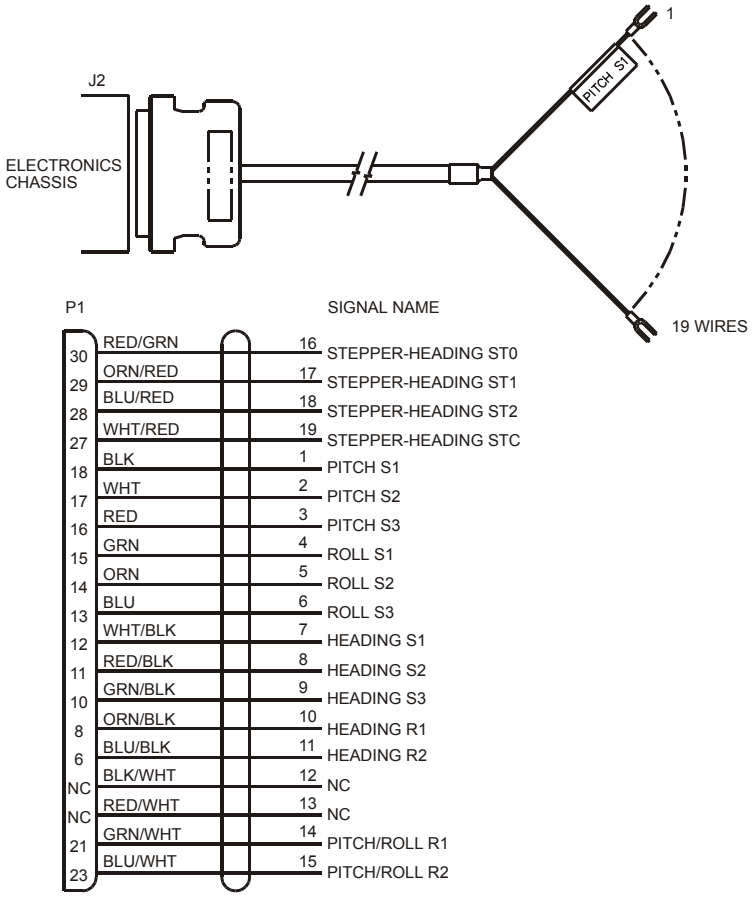

NOTE: This cable provides synchro/stepper heading signals and/or synchro tilt from an external gyrocompass to the electronic chassis. This cable is provided with the instrument (length specified by user). Cable specifications: 26 conductors, cable OD = 8 mm (0.31 in.), terminated at one end with a 37-pin connector (electronic chassis side), terminated at the other end (gyro side) with 19 spade (or forked) lugs for connecting to the gyro

Figure 26. Cable, Gyro Synchro/Stepper to Electronic Chassis (J2)

9 Navigation Interface Considerations

VmDas can read in, decode, and record ensembles from an ADCP and NMEA data from some specific (i.e. GPS and attitude sensors) external devices. *VmDas* stores this data in both raw data files (leaving all original data input in its original format) and in a combined, averaged data file. *VmDas* uses all of this data to create different displays for the user.

VmDas looks for, and utilizes the following strings if transmitted: standard GGA (position), HDG/HDT (Heading), VTG (speed and track) messages, and a proprietary PRDID (pitch and roll) message.

As well as being able to input NMEA strings to *VmDas*, it can produce NMEA output strings of speed log information. The speed log contains VDVBW (ground/water speed) and VDDBT (depth).

NOTE. For more information about NMEA data, see the *VmDas* User's Guide.

10 Power Considerations

Question

What UPS rating should I use with my Ocean Surveyor/Observer ADCP?

Answer

The Ocean Surveyor/Observer uses 1600 watts of peak power. RD Instruments recommends using a UPS system with a rated output power of at least 2400 watts.

All Ocean Surveyor/Observer ADCPs draw the same amount of peak current and inrush current (power up current draw). They will also draw the same average power assuming that they are setup the same.

There is no frequency dependence on the power requirement. All Ocean Surveyor/Observer ADCP frequencies (38, 75, and 150) use the same amount of peak power, 1600 Watts. The only difference is the duration that they draw the peak power.

Here are the power specifications for all Ocean Surveyor/Observer ADCPs:

Input Voltage:	90-250VAC
Frequency:	47-63Hz
Input Power (between transmit):	60W (typical)
Input Power (peak):	< 1600W
Inrush Current @ 115/230VAC:	17/34 Amps rms
Ride through time:	20ms

Transient surge:	EN/IEC 1000-4-2 Level 4
Common mode & normal mode:	EN/IEC 1000-4-5 Level 3

To decide which UPS system to use you must be able to handle more power than the maximum (peak) power that will be needed to operate the Ocean Surveyor/Observer ADCP. This means you do not want to use a UPS system that only provides 1600W, it must provide more than this.

To determine the acceptable requirements for a UPS, you must determine the derating factor you will use. The recommended derating factor is 50% and the minimum derating factor you would use is 75%. Using the recommended derating factor (50%) means that you need a UPS capable of supplying 3200 Watts. If you use the minimum derating factor then you would use a UPS capable of supplying 2133 Watts.

The UPS must be able to handle the inrush current as well. Inrush current is the current required to fully charge up the power supply when power is applied to the electronic chassis. This is particularly true for cases where the system is supplied with 230 VAC, as the inrush current is as high as 34 Amps rms. If the UPS limits the current, then the power on cycle will take longer. You do not want the UPS to shut down during the inrush current draw, as this may not allow the Ocean Surveyor/Observer ADCP electronics to start.

One UPS used by a customer provided 2400 Watts, which provides a derating factor of 67%. This is basically half way between the minimum derating factor and the recommended derating factor. This UPS provided adequate power for the OS38 and appeared to not be “pushing” the UPS beyond a reasonable safety point. Therefore, a UPS system providing 2400 Watts is RD Instrument’s recommendation for all Ocean Surveyor/Observer and Ocean Observer ADCPs.

11 Installation Procedures (Overview)

Read these steps before doing them. In general, follow them in the order listed. Some may differ for your installation, so modify them as necessary. Some can be done simultaneously (e.g., hardware installation and software loading). If you have problems or questions, call us.

a. On receipt of the system, read the Read Me First guide.

b. Before installing the system, test the transducer and electronics chassis right out of the shipping container. Do the following.

   1. All power to the system DISCONNECTED.
   2. Review “Power Considerations,” page 52.
   3. Connect the I/O cable from the electronics chassis to the transducer.

4. Connect the serial I/O cable from the computer to the electronics chassis.
5. Connect the power cable to the electronics chassis and apply power to the system (the Ocean Surveyor/Observer User's Guide shows all cable connections).
6. Follow testing procedures in the Test Guide. Test the system. If errors occur, use the Troubleshooting Guide.

CAUTION. Do NOT ping the Ocean Surveyor/Observer with the transducer in air. The power assembly board will short, causing the electronics chassis to no longer communicate. The transducer is pinged by sending a CS or PT5 command or if *VmDas* is started for collecting data – either of these methods will cause damage if the transducer is in air.

NOTE. It is OK to run the *BBTalk* tests with the transducer in air – the transducer is not pinged for testing.

c. Prepare the system for shipboard installation. Disconnect all power to the system. Disconnect all interface cables.

d. Review "Transducer Mounting Considerations," page 2. Install the transducer head. Mechanically align the system (see "Alignment Procedures (Overview)," page 55).

CAUTION. Take steps to prevent leaks through the hull and gate valves.

e. Review section "6 Electronics Chassis Mounting Considerations," page 32. As necessary, do the following.

   1. Check all switch settings on the gyro board (shown in "Determining and Setting the Synchro Turns Ratio," page 47).
   2. Install the electronics chassis.

f. Review "Computer Considerations," page 41. Install the computer.

g. Review "Cabling Considerations," page 32. As necessary, route and connect the following cables:

   - Transducer to chassis (J1) interface cable.
   - Gyro to chassis (J2) cable.

CAUTION. Signals may be present from the gyro.

   - Navigation to computer cable.

CAUTION. Signals may be present from the navigation device.

h. As necessary, load the software on the computer's hard drive. See the software User's Guides and the Readme.txt files for each program.

i. Configure *VmDas*. See the VmDas User's Guide, *VmDas* help file, and the Ocean Surveyor/Observer User's Guide for help on configuring *VmDas*.

j. Do the Dock Side Tests (see the Test Guide). If errors occur, use the Troubleshooting Guide.

k. Do the Sea Acceptance testing (see the Test Guide). The Sea Acceptance tests include the following checks.

- Interference
- Water Profile Range
- Ringing and (cross-coupling, other pingers, noise)
- Water Profile Reasonableness (transducer alignment)
- Bottom-track (range, accuracy)

12 Alignment Procedures (Overview)

NOTE. This section does not apply to stationary systems (such as Oil Rig platforms). These systems use an internal compass by default.

The mechanical alignment of the transducer head is important to ADCP data accuracy. Mechanically mount the head as close as possible to your reference point. This is usually with the Beam 3 mark at 0° or 45° relative to the ship's fore-to-aft centerline. You also must mount the transducer head as level as possible using the ship's roll and pitch references. Review the "Transducer Mounting Considerations," page 2 for alignment considerations.

VmDas uses the **Heading Correction Parameters** on the **Transforms** tab to align the ADCP's north reference (Beam 3 mark) to the north reference of an external gyro/compass. Ships use the bow as the north reference.

NOTE. Ocean Surveyor/Observer 38kHz oval transducers are always mounted with the Beam 3 mark forward.

When the Ocean Surveyor/Observer is aboard a vessel, the mechanical alignment of the transducer head (Beam 3 mark) is usually aligned with the ship's fore-to-aft centerline (0°) or rotated 45° clockwise. To conceptually determine the misalignment angle, visually hold the ADCP still and turn the ship gyro's north reference to match the ADCP's north reference. For example, if the Beam 3 mark is pointing at the bow (Figure 27), the misalign-

ment angle is zero. If the Beam 3 mark is pointing 45° to starboard (Figure 27), you must turn the ship a +45° to align the two north reference points. Conversely, if the Beam 3 mark is pointing 45° to port, you must turn the ship a -45° to align the two reference points.

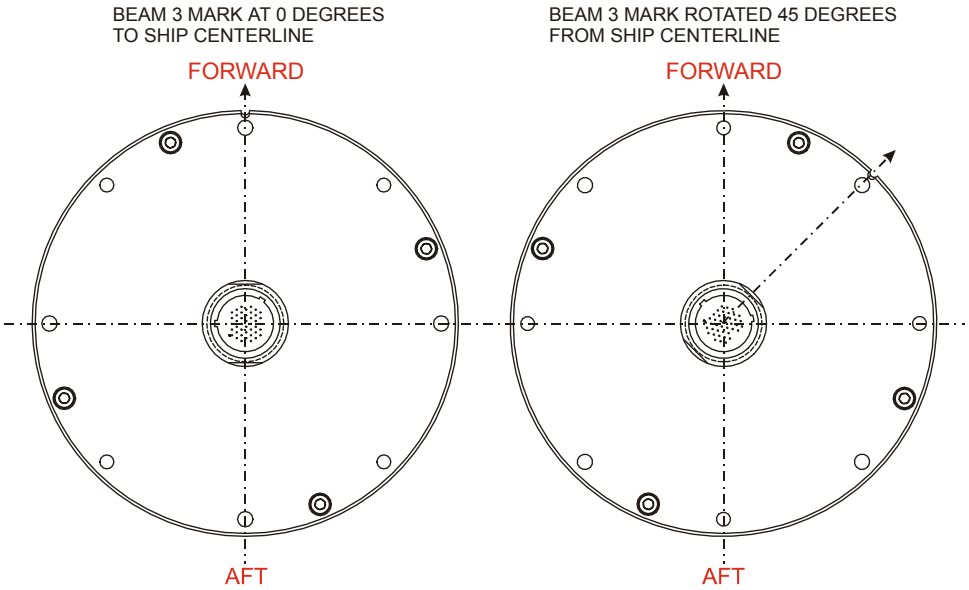

Figure 27. Transducer Misalignment Reference Points

13 Specifications

A brief review of ADCP operation may help you understand the specifications listed in this section.

> **NOTE.** The specifications and dimensions listed in this section are subject to change without notice.

The ADCP emits an acoustic pulse called a PING. Scatterers that float ambiently with the water currents reflect some of the energy from the ping back to the ADCP. The ADCP uses the return signal to calculate a velocity. The energy in this signal is the *echo intensity*. Echo intensity is sometimes used to determine information about the scatterers.

The velocity calculated from each ping has a *statistical uncertainty*; however, each ping is an independent sample. The ADCP reduces this statistical uncertainty by averaging a collection of pings. A collection of pings averaged together is an *ensemble*. The ADCP's maximum *ping rate* limits the time required to reduce the statistical uncertainty to acceptable levels.

The ADCP does not measure velocity at a single point; it measures velocities throughout the water column. The ADCP measures velocities from its transducer head to a specified range and divides this range into uniform segments called *depth cells* (or *bins*). The collection of depth cells yields a *profile*. The ADCP produces two profiles, one for velocity, and one for echo intensity.

The ADCP calculates velocity data relative to the ADCP. The velocity data has both speed and direction information. If the ADCP is moving, and is within range of the bottom, it can obtain a velocity from returns off the bottom. This is called *bottom tracking*. The bottom track information can be used to calculate the absolute velocity of the water. The ADCP can get absolute direction information from a heading sensor.

The following tables list the specifications for the Ocean Surveyor/Observer ADCP. About the specifications:

a. All these specifications assume minimal ADCP motion - pitch, roll, heave, rotation, and translation.

b. Except where noted, this specification table applies to typical setups and conditions. Typical setups use the default input values for each parameter (exceptions include Pings Per Ensemble and Number of Depth Cells). Typical conditions assume uniform seawater velocities at a given depth, moderate shear, moderate ADCP motion, and typical echo intensity levels.

c. The total measurement error of the ADCP is the sum of:

   - Long-term instrument error (as limited by instrument accuracy).
   - The remaining statistical uncertainty after averaging.
   - Errors introduced by measurement of ADCP heading and motion.

d. Because individual pings are independent, the statistical uncertainty of the measurement can be reduced according to the equation:

$$\frac{\text{Statistical Uncertainty for One Ping}}{\sqrt{\text{Number of Pings}}}$$

13.1 Water Velocity Specifications

Table 15: Water Profiling – Long Range Mode

Frequency	Vertical Resolution Cell Size (m) [3]	Max Range (m) [1]	Precision (cm/s) [2]
38kHz	16	800-1000	30
	24	800-1000	23
75kHz	8	520-650	30
	16	560-700	17
150kHz	4	360-400	30
	8	380-425	17

Table 16: Water Profiling – High Precision Mode

Frequency	Vertical Resolution Cell Size (m) [3]	Max Range (m) [1]	Precision (cm/s) [2]
38kHz	16	520-730	12
	24	600-730	9
75kHz	8	310-430	12
	16	350-450	9
150kHz	4	200-250	12
	8	220-275	9

(1) Ranges at 1 to 5 knots ship speed are typical and vary with situation; (2) single-ping standard deviation; (3) user's choice of depth cell size is not limited to the typical values specified.

NOTE. Ranges are dependent on both background noise levels and environmental issues such as sea state, prop noise, engine noise, sea chest configuration, use of a window, and absorption through the water. The specifications above assume no added background noise from the ship or sea states, and the absorption is based on 4 degree C.

13.2 Profile Parameters

Velocity Long Term Accuracy: ±1.0% ±0.5 cm/s

Velocity Range: -Default setup 22 knots (combined water and vessel speed)

Number of Depth Cells: 1 to 128

Table 17: Water Profile Maximum Ping Rate

Frequency (kHz)	Ping Rate (Hz)[1]
38	0.5
75	0.7
150	1.1

Note – Ping rates specified for maximum range in Long Range mode. Shorter ranges allow faster ping rates.

13.3 Bottom Track Specifications

Table 18: Nominal Bottom Track Altitude

Frequency (kHz)	Altitude (m)
38	1,500
75	950
150	600

Bottom Track Precision: <2 cm/s

Bottom Track Velocity Accuracy: +/-1% 0.5cm/sec

Bottom Track Range Accuracy: <+/-2%*

NOTE. *Bottom Track Range is slant range divided by the cosine of the beam angle. Accuracy reported excludes errors introduced by changes in the speed of sound profile, errors caused by tilting of the transducer, and by the slope of the bottom.

13.4 Echo Intensity Profile

Dynamic Range: 80dB

Precision: ±1.5dB

Relative Accuracy: 2.5 dB RMS

Scale Factor: 0.46 dB/count

13.5 Transducer and Hardware Specifications

Beam angle: 30°

Configuration: 4 beam, Janus

Communications: RS-422 or RS-232 Hex-ASCII or binary at 1200 to 115,200 baud

13.6 Internal Sensors

Temperature (mounted on transducer)

- Range: -5 to 45°C
- Precision: <0.1°C
- Resolution: 0.027°C
- Accuracy: ±0.4°C

Tilt

- Range: ±20°
- Accuracy: ±1.0°
- Precision: <0.1°
- Resolution: 0.1°

Compass (fluxgate type)

- Accuracy: ±5°
- Precision: <0.1°
- Resolution: 0.1°
- Maximum tilt: ±15°

13.7 System Power Specifications

AC Input: 90 to 250 VAC, 47 to 63 Hz

Power: 1600W peak

Inrush Current: 17A @ 115VAC, 34A @230VAC

Transmit Power: 1100W typical

Standby Power: 60W

13.8 Environmental Specifications

Operating Temperature: -5 to +40°C

Storage Temperature: -50 to +80°C

Standard Depth Rating: 100m

14 Outline Installation Drawings

The following drawings show the standard Ocean Surveyor/Observer dimensions and weights.

Table 19: Outline Installation Drawings

Description	Drawing #
Ocean Surveyor/Observer Electronics Chassis	96A-6000
Ocean Surveyor/Observer 75kHz	96A-6007
Ocean Surveyor/Observer 75kHz, Wide Flange	96A-6011
Ocean Surveyor/Observer 150kHz	96A-6008
Ocean Surveyor/Observer 38kHz	96A-6009
Ocean Surveyor/Observer 150kHz, Flanged	96A-6010

CAUTION. ***Outline Installation Drawings are subject to change between manual updates.*** When an addition or correction to the manual is needed, an Interim Change Notice (ICN) will be posted to our web site on the Customer Service page (www.rdinstrument.com). Please check our web site often.

NOTE. Drawing 96A-6011 will be used for new builds starting in March 2003. For systems built prior to March 2003, use the 96A-6007 drawing.

Ocean Surveyor/Observer Electronics Chassis - 96A-6000

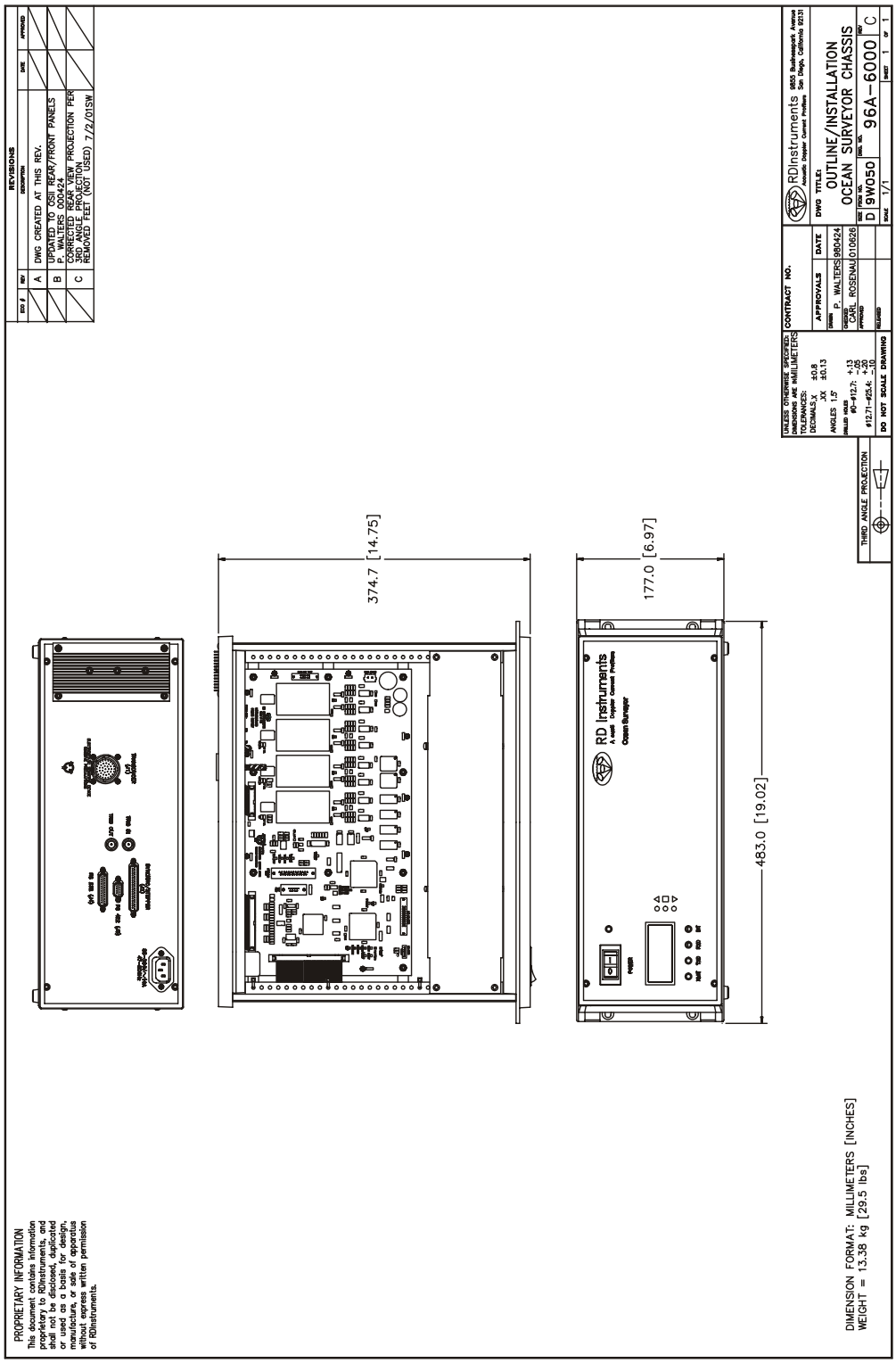

Ocean Surveyor/Observer 75kHz - 96A-6007

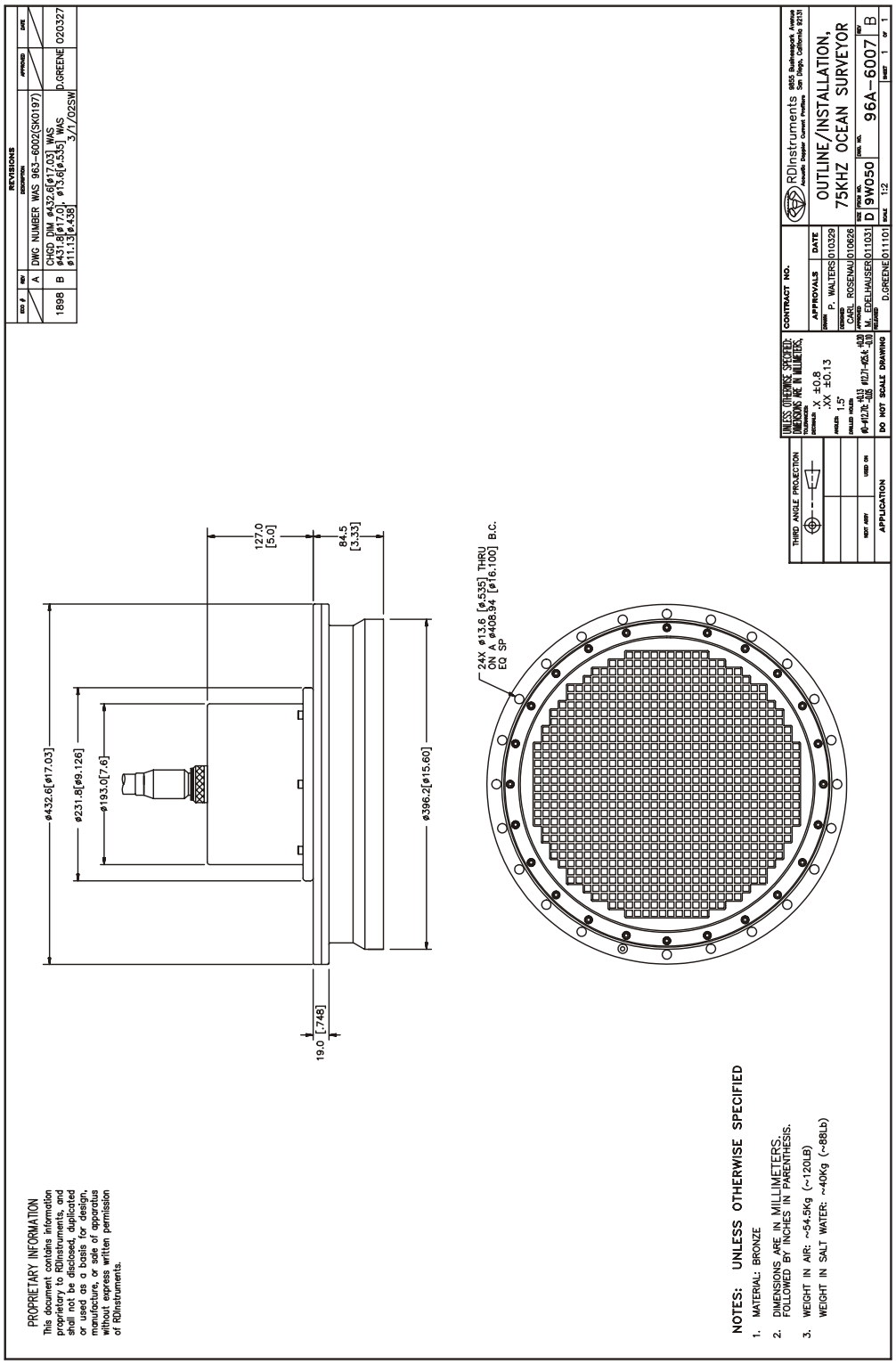

Ocean Surveyor/Observer 75kHz, Wide Flange - 96A-6011

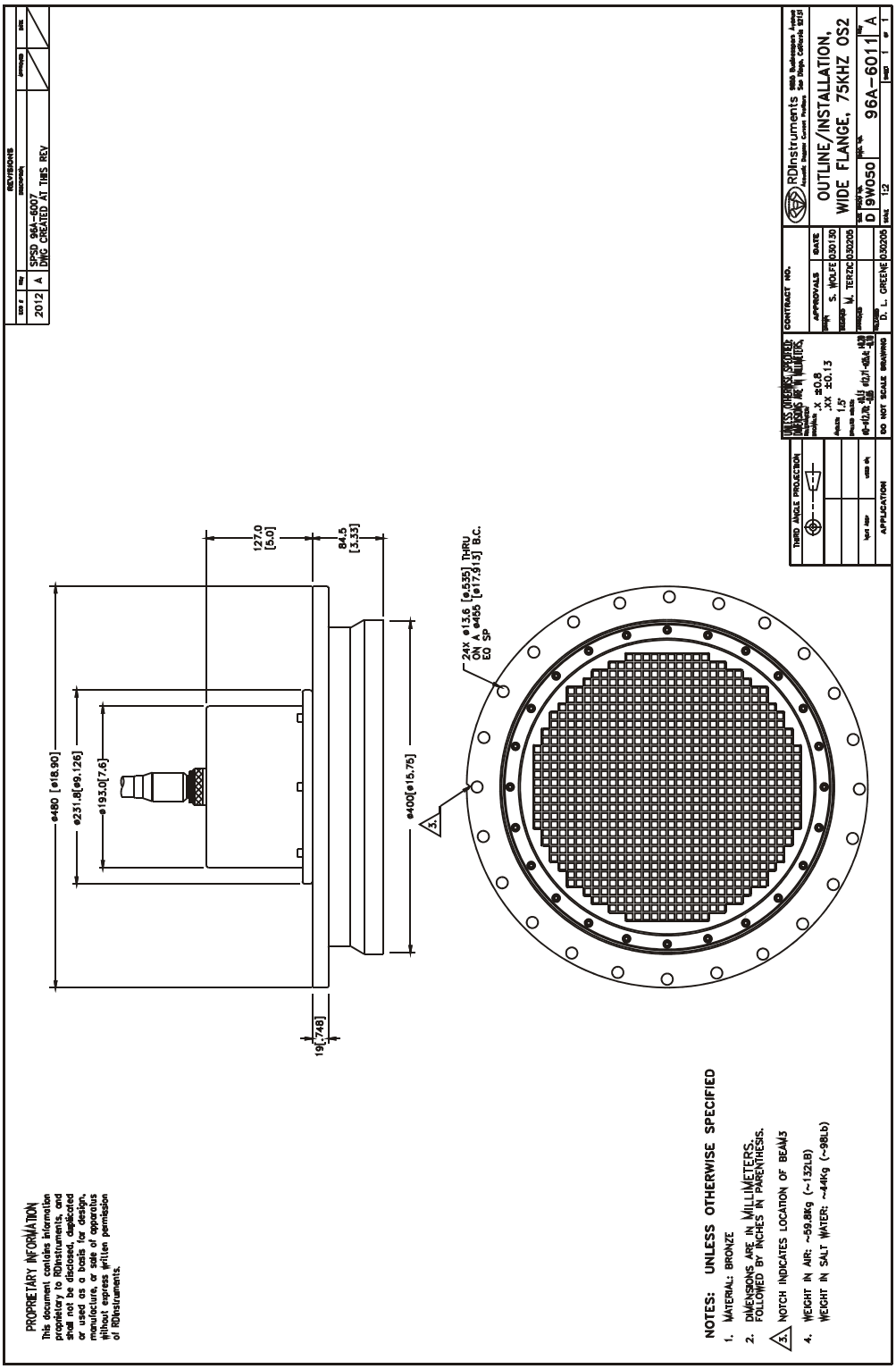

Ocean Surveyor/Observer 150kHz - 96A-6008

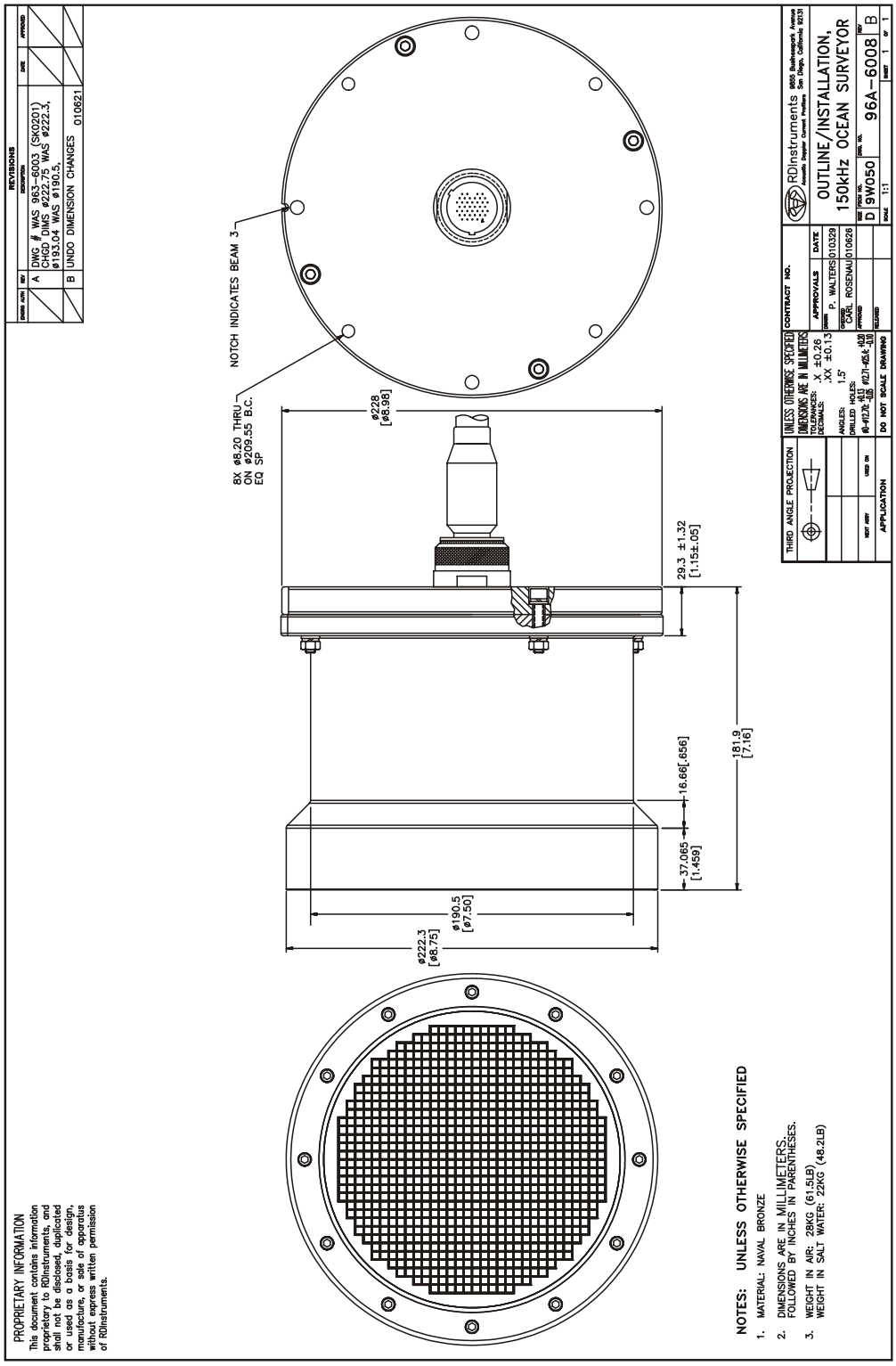

Ocean Surveyor/Observer 38kHz – 96A-6009

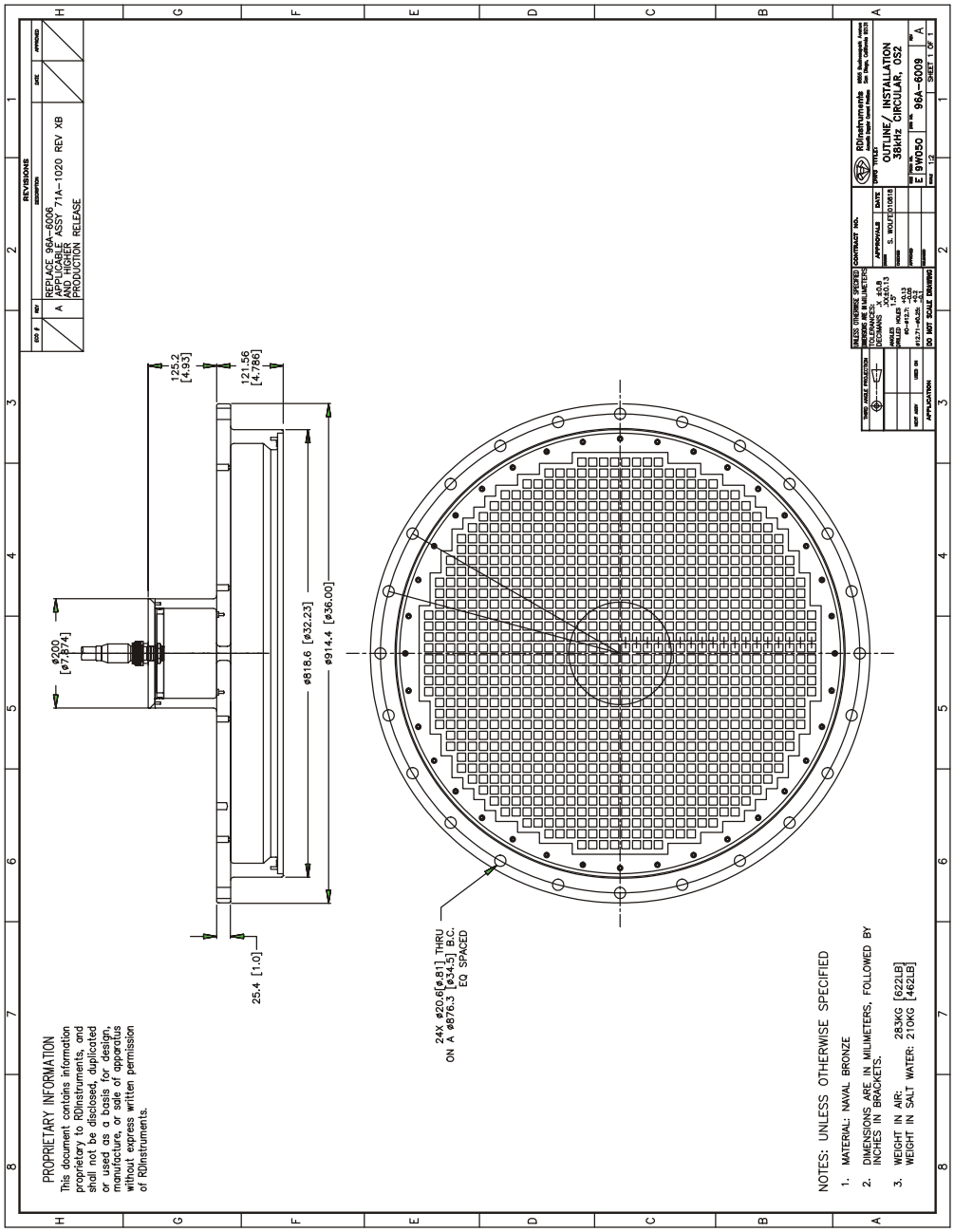

Ocean Surveyor/Observer 150kHz, Flanged – 96A-6010

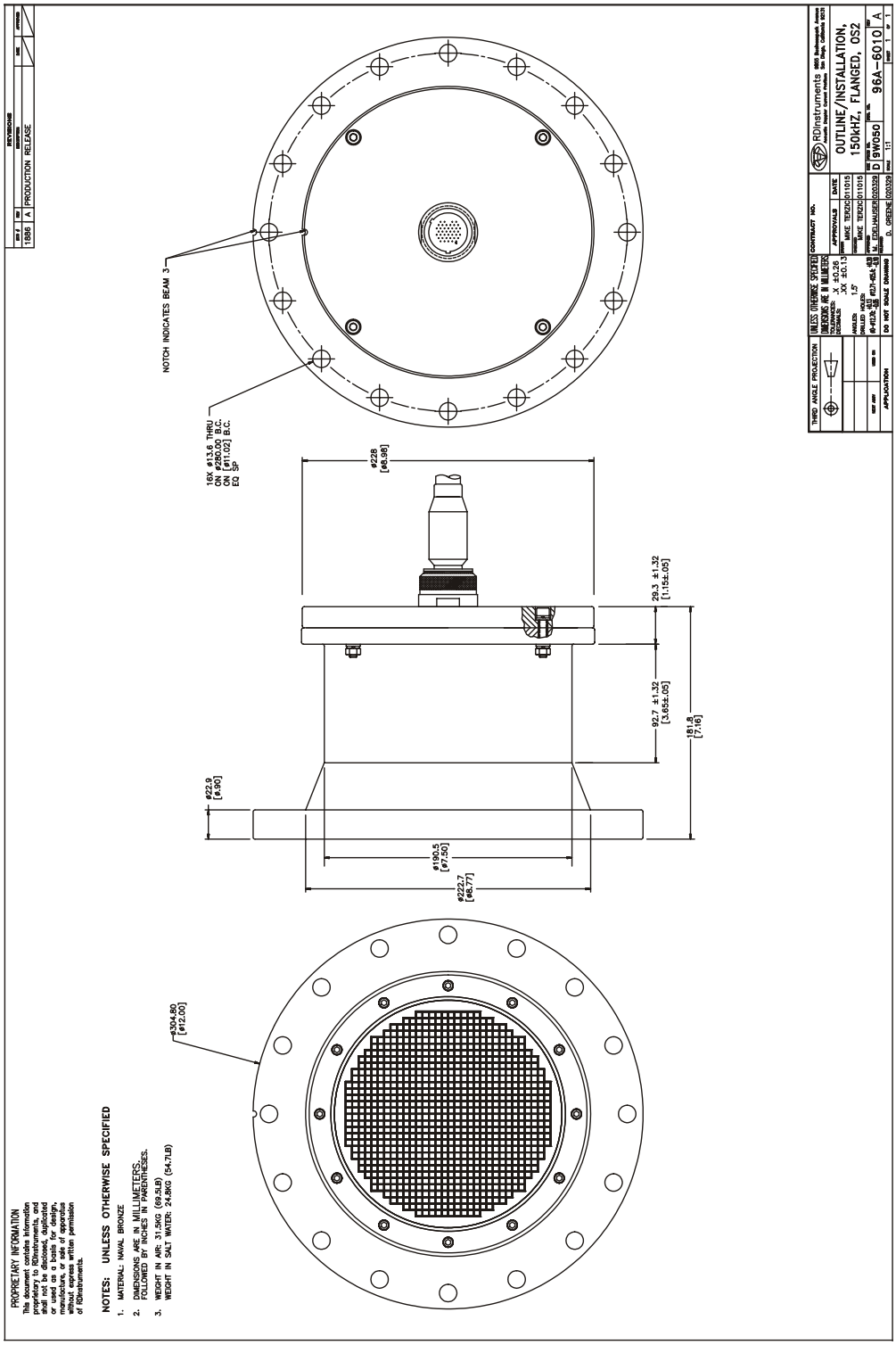

NOTES